IEEE PES Task Force on Benchmark Systems for Stability Controls

Report on the 14-generator system (Australian Reduced Model)

Version 1 – June 6th , 2013

Leonardo Lima

The present report refers to a nonlinear stability study carried over the Australian Reduced Model [1] using the Siemens PTI's PSS/E software [2]. The main objectives of this report are to provide an alternative data setup and to provide some validation of such data, comparing (to the extent possible) the results obtained with a time-domain nonlinear simulation with the eigenvalue analysis shown in [1].

1. Power Flow

One important characteristic associated with the Australian Reduced Model [1] is related to the definition of different and quite distinct operating conditions (generator and load dispatches). This benchmark system comes with 6 different scenarios of generation and load dispatches (and inter-area transfers), designed to pose significant challenges to the assessment of the robustness of the stabilizers, as a function of the system dispatch.

The system data is described in the [1] and it is available electronically in PSS/E format. This report is not going to reproduce all that data, but it is important to note that a few changes have been introduced, when compared with the original data associated with [1]. The original data is provided in separate files, one file for each of the 6 cases. Due to the different generation and load scenarios in these cases, the number of generator units in service at each plant is different in each case.

The data has been modified to always include the same total number of units at each plant, for all cases, using PSS/E flag to indicate the status of each unit as in-service or out-of-service. This is a minor change regarding the original data, but it is important for PSS/E users, as it allows a single one-line diagram and a single dynamic simulation data setup to be used with all 6 power flow cases. Additionally, the values for minimum and maximum active and reactive power outputs for each generation unit have been updated, to reflect the generation capability of each unit.

Table 1 presents the maximum number of parallel units available in each power plant in the power flow cases. The minimum active power output has been set to zero, allowing all units to be dispatched (if necessary) as synchronous condensers. It should be noted that this is usually not feasible, for real equipment.

Table 1: Generation Units Represented in the 14-Generator System

Bus Number	Bus Name	Number of units	Pmax (MW)	rated pf	Qmax (Mvar)	Qmin (Mvar)	Mbase (MVA)
101	1_HPSGEN 15.000	12	300	0.90	145.3	-104.1	333.3
201	2_BPSGEN 20.000	6	600	0.90	290.6	-208.2	666.7
202	2_EPSGEN 20.000	5	500	0.90	242.2	-173.5	555.6
203	2_VPSGEN 20.000	4	500	0.90	242.2	-173.5	555.6
204	2_MPSGEN 20.000	6	600	0.90	290.6	-208.2	666.7
301	3_LPSGEN 20.000	8	600	0.90	290.6	-208.2	666.7
302	3_YPSGEN 20.000	4	400	0.90	193.7	-138.8	444.4
401	4_TPSGEN 20.000	4	355.5	0.80	266.6	-138.8	444.4
402	4_CPSGEN 20.000	3	300	0.90	145.3	-104.1	333.3
403	4_SPSGEN 20.000	4	400	0.90	193.7	-138.8	444.4
404	4_GPSGEN 20.000	6	300	0.90	145.3	-104.1	333.3
501	5_NPSGEN 20.000	2	300	0.90	145.3	-104.1	333.3
502	5_TPSGEN 15.000	4	225	0.90	109	-78.1	250
503	5_PPSGEN 15.000	6	150	0.90	72.7	-52.1	166.7

All SVCs and synchronous condensers in these cases are represented as synchronous machines (PV buses) in the power flow. This is not the recommended representation for SVCs in PSS/E, as the reactive power limits are considered constant, independent of terminal voltage magnitude. Representing SVCs as switched shunts would be a better option, but this representation might not be available in other software. Thus, for compatibility and usability in other platforms, the representation of the SVCs as PV buses is maintained. Table 2 presents the assumed limits for these devices. It should be noted that these limits were not presented in [1], so the same range of +/– 200 MVAr has been assumed for all SVCs. This range is sufficient to cope with the power flow requirements of all cases, as shown by the results in Table 9 in [1].

Table 2: Synchronous Condensers or SVCs Represented in the 14-Generator System

Bus Number	Bus Name	Number of units	Qmax (Mvar)	Qmin (Mvar)	Mbase (MVA)
205	2_ASV330 330.00	1	200	-200	100
212	2_SW_330 330.00	1	200	-200	100
216	2_SS_330 330.00	1	200	-200	100
307	3_M__500 500.00	1	200	-200	100
313	3_RSV220 220.00	1	200	-200	100
406	4_N__275 275.00	1	200	-200	100
412	4_BW_275 275.00	1	200	-200	100
507	5_PSV275 275.00	1	200	-200	100
509	5_SSV275 275.00	1	200	-200	100

1.1 Case 1 (Heavy Load – North → South Transfer)

The power flow solution is shown in Figure 1. It is a very good match (within the power flow solution tolerance of 0.1 MVA) to the power flow results given in [1].

Table 3 summarizes the generation output in Case 1, indicating the active and reactive power output of an individual generation unit and the number of units in service at each power plant. Table 4 presents the SVCs that are in service in Case 1 and their respective reactive power output. In both tables, a positive value indicates power being injected into the network (generator convention).

Table 5 presents a summary of the total generation and load for each area in the system.

Table 3: Summary of Generation Dispatch for the 14-Generator System (Case 1)

Bus Number	Bus Name	Number of units in service	Pgen (MW)	Qgen (Mvar)
101	1_HPSGEN 15.000	4	75.2019	77.87
201	2_BPSGEN 20.000	6	600	95.61
202	2_EPSGEN 20.000	5	500	132.68
203	2_VPSGEN 20.000	4	375	132.80
204	2_MPSGEN 20.000	6	491.7	122.36
301	3_LPSGEN 20.000	7	600	142.35
302	3_YPSGEN 20.000	3	313.3	51.53
401	4_TPSGEN 20.000	4	350	128.72
402	4_CPSGEN 20.000	3	279	59.28
403	4_SPSGEN 20.000	4	350	52.30
404	4_GPSGEN 20.000	6	258.3	54.47
501	5_NPSGEN 20.000	2	300	25.35
502	5_TPSGEN 15.000	4	200	40.07
503	5_PPSGEN 15.000	4	109	25.21

Table 4: Summary of SVC Output for the 14-Generator System (Case 1)

Bus Number	Bus Name	Number of units in service	Qgen (Mvar)
313	3_RSV220 220.00	1	71.40
412	4_BW_275 275.00	1	58.16
507	5_PSV275 275.00	1	22.65
509	5_SSV275 275.00	1	10.55

Table 5: Summary of Load and Generation for the 14-Generator System (Case 1)

```
    PTI INTERACTIVE POWER SYSTEM SIMULATOR--PSS(R)E     FRI, JUN 07 2013   6:44
LF_CASE01_R3_S  14-GENERATOR, SIMPLIFIED SYSTEM MODEL.              AREA TOTALS
AREA4->AREA2->AREA3->AREA5 500-1000-500 MW.                          IN MW/MVAR

                FROM      TO    TO BUS  TO LINE     FROM      TO            DESIRED
X-- AREA --X GENERATION  LOAD    SHUNT    SHUNT CHARGING  NET INT   LOSSES  NET INT

   1           300.8    450.0      0.0      0.0      0.0   -149.2      0.0      0.0
               311.5     45.0      0.0      0.0      0.0    251.6     14.9

   2         10550.2   9550.0      0.0      0.0      0.0    629.3    370.9      0.0
              2434.1    955.0   -714.6      0.0   1906.9   -339.4   4439.9

   3          5139.9   5500.0      0.0      0.0      0.0   -501.7    141.6      0.0
              1222.4    551.0      0.0      0.0   1931.5     46.8   2556.1

   4          5186.8   4500.0      0.0      0.0      0.0    521.4    165.4      0.0
              1286.9    451.0     77.3      0.0   1442.9     11.6   2189.9

   5          1836.0   2300.0      0.0      0.0      0.0   -499.9     35.9      0.0
               345.0    460.0      0.0      0.0    586.0     29.3    441.7

TOTALS       23013.7  22300.0      0.0      0.0      0.0      0.0    713.7      0.0
              5599.9   2462.0   -637.2      0.0   5867.3      0.0   9642.4
```

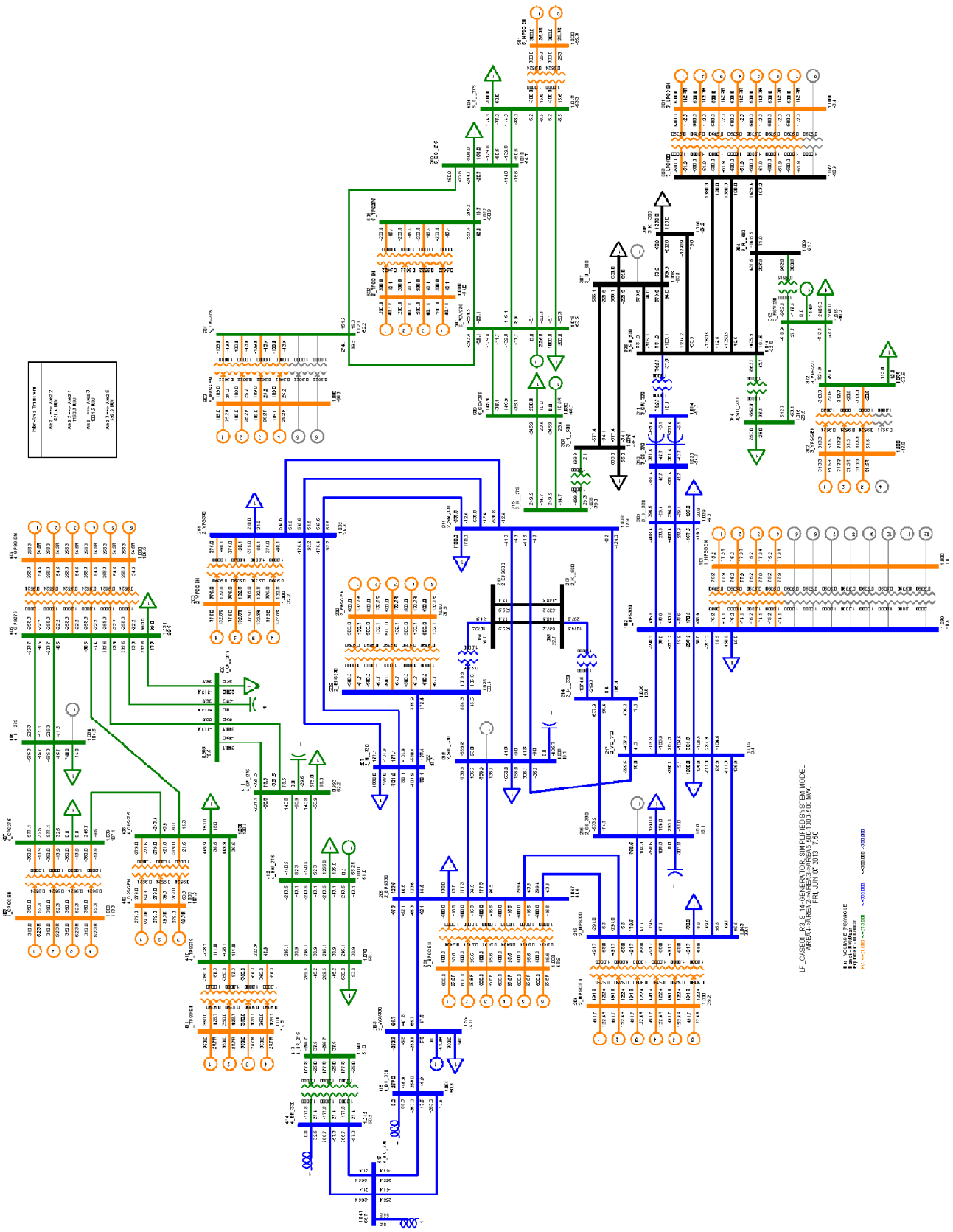

Figure 1: Case 1 Power Flow Solution

1.2 Case 2 (Medium-Heavy Load – South → North Transfer)

The power flow solution is shown in Figure 2. It is a very good match (within the power flow solution tolerance of 0.1 MVA) to the power flow results given in [1].

Table 6 summarizes the generation output in Case 2, indicating the active and reactive power output of an individual generation unit and the number of units in service at each power plant. Table 7 presents the SVCs that are in service in Case 2 and their respective reactive power output. In both tables, a positive value indicates power being injected into the network (generator convention).

Table 8 presents a summary of the total generation and load for each area in the system.

Table 6: Summary of Generation Dispatch for the 14-Generator System (Case 2)

Bus Number	Bus Name	Number of units in service	Pgen (MW)	Qgen (Mvar)
101	1_HPSGEN 15.000	3	159.56	54.45
201	2_BPSGEN 20.000	5	560	38.87
202	2_EPSGEN 20.000	4	480	60.49
203	2_VPSGEN 20.000	3	450	82.41
204	2_MPSGEN 20.000	4	396	17.83
301	3_LPSGEN 20.000	8	585	141.08
302	3_YPSGEN 20.000	4	383	63.26
401	4_TPSGEN 20.000	4	350	116.52
402	4_CPSGEN 20.000	3	290	31.38
403	4_SPSGEN 20.000	4	350	47.16
404	4_GPSGEN 20.000	6	244	39.79
501	5_NPSGEN 20.000	2	300	–8.81
502	5_TPSGEN 15.000	4	200	53.03
503	5_PPSGEN 15.000	5	138	36.82

Table 7: Summary of SVC Output for the 14-Generator System (Case 2)

Bus Number	Bus Name	Number of units in service	Qgen (Mvar)
205	2_ASV330 330.00	1	41.79
313	3_RSV220 220.00	1	129.40
412	4_BW_275 275.00	1	63.87
507	5_PSV275 275.00	1	36.82
509	5_SSV275 275.00	1	50.18

Table 8: Summary of Load and Generation for the 14-Generator System (Case 2)

```
    PTI INTERACTIVE POWER SYSTEM SIMULATOR--PSS(R)E     SAT, JUN 08 2013   7:13
LF_CASE02_R3_S 14-GEN. SIMPLIFIED MODEL OF 4-STATE SYSTEM.          AREA TOTALS
NORTHFLOW AREA5->AREA3->AREA2->AREA4 500-1000-500                    IN MW/MVAR

                FROM      TO    TO BUS  TO LINE     FROM      TO            DESIRED
X-- AREA --X GENERATION  LOAD    SHUNT    SHUNT CHARGING  NET INT   LOSSES  NET INT

   1           478.7    380.0      0.0      0.0      0.0     98.7      0.0      0.0
               163.3     38.0      0.0      0.0      0.0     97.8     27.6

   2          7654.0   8120.0      0.0      0.0      0.0   -618.1    152.1      0.0
               796.7    812.0   -320.5      0.0   1963.0    113.5   2154.6

   3          6212.0   5500.0      0.0      0.0      0.0    501.5    210.5      0.0
              1511.1    551.0      0.0      0.0   1932.7   -143.0   3035.8

   4          5134.0   5500.0      0.0      0.0      0.0   -482.7    116.7      0.0
              1051.5    550.0     75.0      0.0   1466.4    117.1   1775.7

   5          2090.0   1500.0      0.0      0.0      0.0    500.6     89.4      0.0
               465.9    300.0    101.9      0.0    605.6   -185.3    854.9

TOTALS       21568.7  21000.0      0.0      0.0      0.0      0.0    568.7      0.0
              3988.4   2251.0   -143.6      0.0   5967.7      0.0   7848.7
```

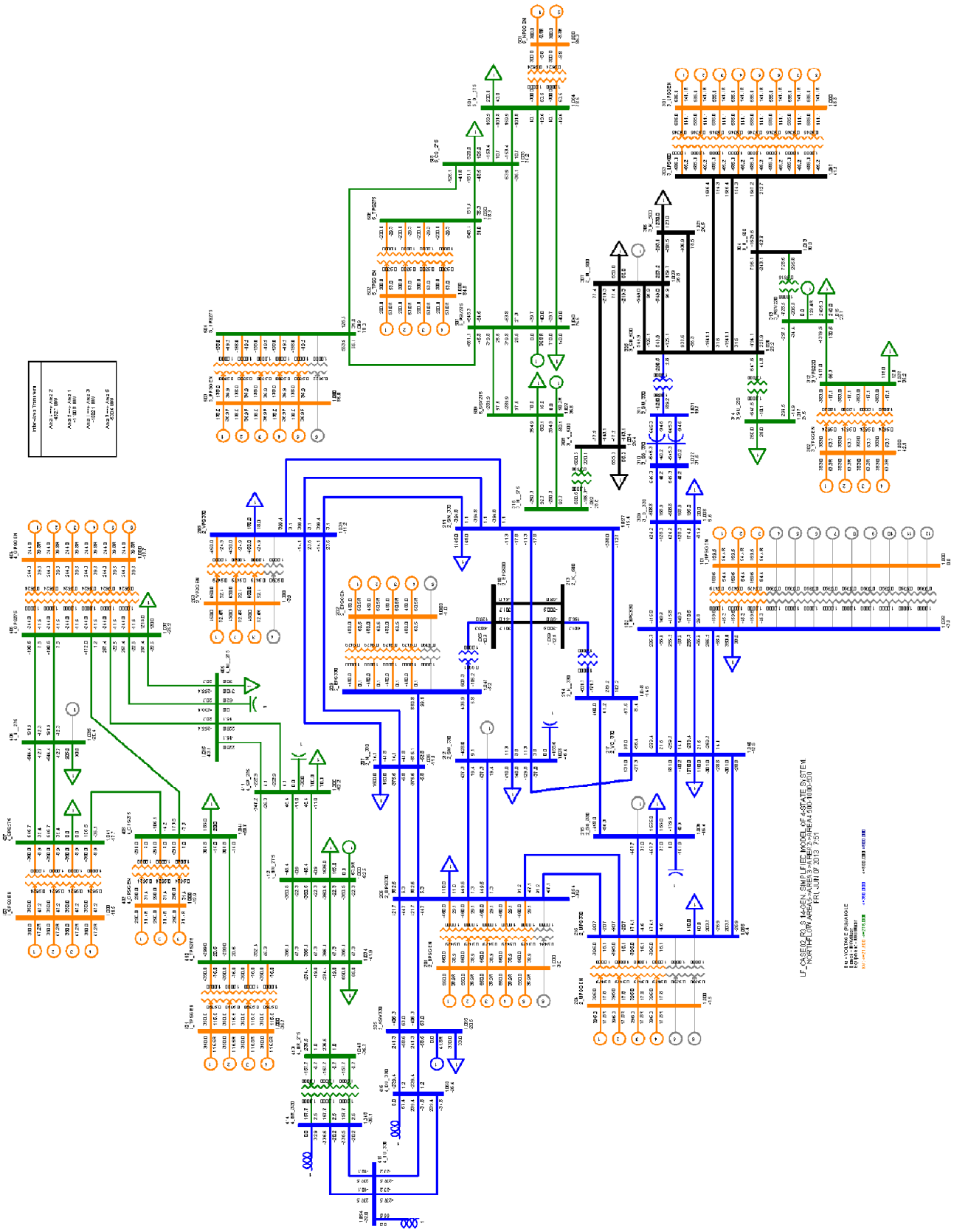

Figure 2: Case 2 Power Flow Solution

1.3 Case 3 (Peak Load – Hydro → North and South Transfers)

The power flow solution is shown in Figure 3. It is a very good match (within the power flow solution tolerance of 0.1 MVA) to the power flow results given in [1].

Table 9 summarizes the generation output in Case 3, indicating the active and reactive power output of an individual generation unit and the number of units in service at each power plant. Table 10 presents the SVCs that are in service in Case 3 and their respective reactive power output. In both tables, a positive value indicates power being injected into the network (generator convention).

Table 11 presents a summary of the total generation and load for each area in the system.

Table 9: Summary of Generation Dispatch for the 14-Generator System (Case 3)

Bus Number	Bus Name	Number of units in service	Pgen (MW)	Qgen (Mvar)
101	1_HPSGEN 15.000	12	248.26	21.78
201	2_BPSGEN 20.000	6	550	109.14
202	2_EPSGEN 20.000	5	470	127.55
203	2_VPSGEN 20.000	2	225	157.04
204	2_MPSGEN 20.000	6	536	96.49
301	3_LPSGEN 20.000	8	580	157.60
302	3_YPSGEN 20.000	4	318	49.65
401	4_TPSGEN 20.000	4	350	123.15
402	4_CPSGEN 20.000	3	290	32.04
403	4_SPSGEN 20.000	4	350	47.34
404	4_GPSGEN 20.000	6	244	39.98
501	5_NPSGEN 20.000	2	300	6.55
502	5_TPSGEN 15.000	4	180	48.79
503	5_PPSGEN 15.000	6	125	32.62

Table 10: Summary of SVC Output for the 14-Generator System (Case 3)

Bus Number	Bus Name	Number of units in service	Qgen (Mvar)
205	2_ASV330 330.00	1	–5.16
313	3_RSV220 220.00	1	158.79
412	4_BW_275 275.00	1	83.80
507	5_PSV275 275.00	1	18.01
509	5_SSV275 275.00	1	–63.41

Table 11: Summary of Load and Generation for the 14-Generator System (Case 3)

```
    PTI INTERACTIVE POWER SYSTEM SIMULATOR--PSS(R)E     SAT, JUN 08 2013   7:25
LF_CASE03_R3_S  14-GENERATOR SIMPLIFIED MODEL OF 4-STATE            AREA TOTALS
SYSTEM: HPS 3GW; AREA5<-AREA3<-AREA2->AREA4 250-1000-500             IN MW/MVAR

                FROM      TO    TO BUS  TO LINE     FROM      TO            DESIRED
X-- AREA --X GENERATION  LOAD    SHUNT    SHUNT CHARGING  NET INT   LOSSES  NET INT

   1          2979.1    475.0      0.0      0.0      0.0   2504.1      0.0      0.0
               261.4     50.0      0.0      0.0      0.0    -29.7    241.1

   2          9316.0  10025.0      0.0      0.0      0.0  -1020.1    311.1      0.0
              2180.5   1030.0   -402.5      0.0   1912.4   -163.7   3629.1

   3          5912.0   6500.0      0.0      0.0      0.0   -749.2    161.2      0.0
              1618.2    670.0      0.0      0.0   1944.4      7.0   2885.7

   4          5134.0   5500.0      0.0      0.0      0.0   -483.5    117.5      0.0
              1101.8    550.0     68.2      0.0   1444.5    140.7   1787.3

   5          2070.0   2300.0      0.0      0.0      0.0   -251.3     21.3      0.0
               358.6    460.0    100.5      0.0    608.8     45.7    361.2

TOTALS       25411.1  24800.0      0.0      0.0      0.0      0.0    611.1      0.0
              5520.4   2760.0   -233.8      0.0   5910.2      0.0   8904.3
```

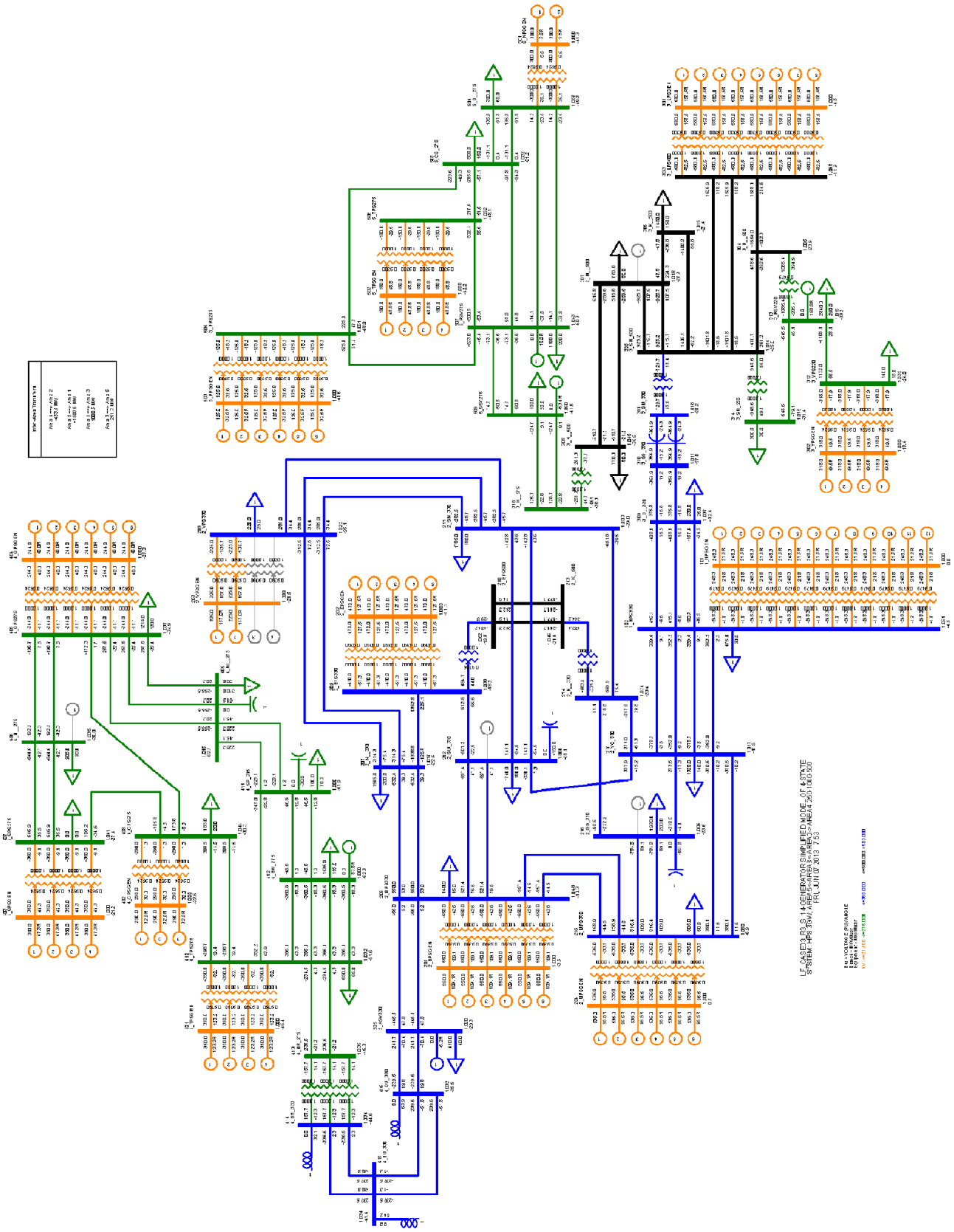

Figure 3: Case 3 Power Flow Solution

1.4 Case 4 (Light Load – Area 2 → North and South Transfers)

The power flow solution is shown in Figure 4. It is a very good match (within the power flow solution tolerance of 0.1 MVA) to the power flow results given in [1].

Table 12 summarizes the generation output in Case 4, indicating the active and reactive power output of an individual generation unit and the number of units in service at each power plant. Table 13 presents the SVCs that are in service in Case 4 and their respective reactive power output. In both tables, a positive value indicates power being injected into the network (generator convention).

Table 14 presents a summary of the total generation and load for each area in the system.

Table 12: Summary of Generation Dispatch for the 14-Generator System (Case 4)

Bus Number	Bus Name	Number of units in service	Pgen (MW)	Qgen (Mvar)
101	1_HPSGEN 15.000	2	0	–97.36
201	2_BPSGEN 20.000	4	540	–30.82
202	2_EPSGEN 20.000	3	460	–2.46
203	2_VPSGEN 20.000	3	470	9.41
204	2_MPSGEN 20.000	4	399.29	–43.55
301	3_LPSGEN 20.000	6	555	16.62
302	3_YPSGEN 20.000	2	380	–9.25
401	4_TPSGEN 20.000	3	320	–21.89
402	4_CPSGEN 20.000	2	290	–2.35
403	4_SPSGEN 20.000	3	320	14.21
404	4_GPSGEN 20.000	3	217	–3.51
501	5_NPSGEN 20.000	2	280	–52.53
502	5_TPSGEN 15.000	3	180	–1.82
503	5_PPSGEN 15.000	1	150	2.20

Table 13: Summary of SVC Output for the 14-Generator System (Case 4)

Bus Number	Bus Name	Number of units in service	Qgen (Mvar)
205	2_ASV330 330.00	1	–39.37
313	3_RSV220 220.00	1	86.68
412	4_BW_275 275.00	1	–53.02
507	5_PSV275 275.00	1	–4.02
509	5_SSV275 275.00	1	–109.26

Table 14: Summary of Load and Generation for the 14-Generator System (Case 4)

```
    PTI INTERACTIVE POWER SYSTEM SIMULATOR--PSS(R)E     SAT, JUN 08 2013   7:38
LF_CASE04_R3_S   14-GEN. SIMPLIFIED MODEL OF THE 4-STATE            AREA TOTALS
SYSTEM: LIGHTLD AREA4<-AREA2->AREA3->AREA5 200-200-200MW             IN MW/MVAR

                FROM      TO    TO BUS  TO LINE     FROM      TO            DESIRED
X-- AREA --X GENERATION  LOAD    SHUNT    SHUNT CHARGING  NET INT   LOSSES  NET INT

   1             0.0    270.0      0.0      0.0      0.0   -270.0      0.0      0.0
              -194.7     30.0      0.0      0.0      0.0   -231.5      6.8

   2          6547.1   5775.0      0.0      0.0      0.0    662.5    109.7      0.0
              -316.0    620.0   -739.9      0.0   1893.1    -59.5   1756.5

   3          4090.0   4027.0      0.0      0.0      0.0      0.3     62.7      0.0
               167.9    450.0      0.0      0.0   1919.5    166.0   1471.4

   4          3151.0   3302.0      0.0      0.0      0.0   -192.8     41.8      0.0
               -91.3    345.0     69.8      0.0   1431.6    133.7    791.9

   5          1250.0   1432.0      0.0      0.0      0.0   -199.9     17.9      0.0
              -221.6    150.0      0.0      0.0    579.5     -8.6    216.5

TOTALS       15038.1  14806.0      0.0      0.0      0.0      0.0    232.1      0.0
              -655.7   1595.0   -670.0      0.0   5823.8      0.0   4243.2
```

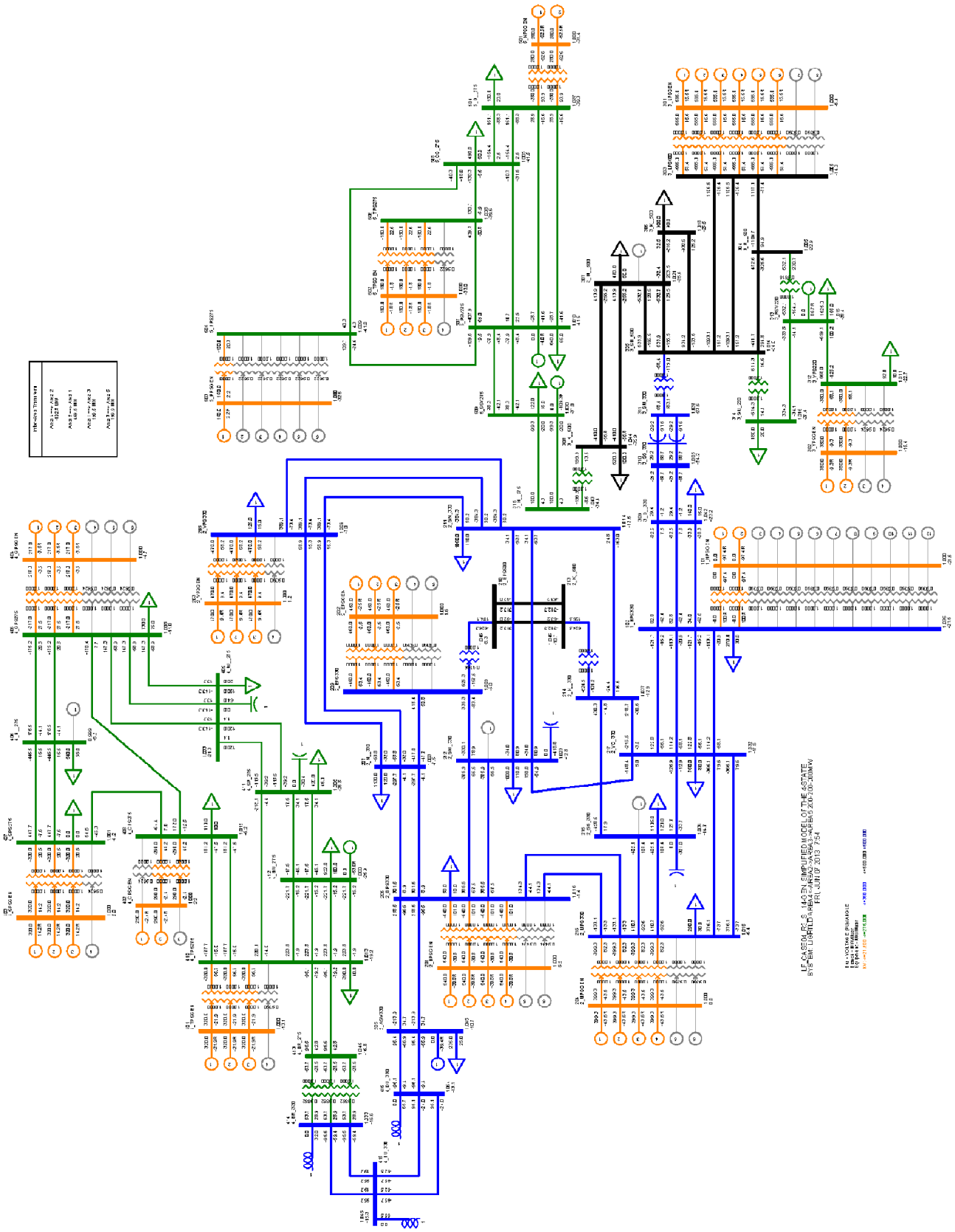

Figure 4: Case 4 Power Flow Solution

1.5 Result for Case 5 (Medium Load – North and South → Pumping Storage)

The power flow solution is shown in Figure 5. It is a very good match (within the power flow solution tolerance of 0.1 MVA) to the power flow results given in [1].

Table 15 summarizes the generation output in Case 5, indicating the active and reactive power output of an individual generation unit and the number of units in service at each power plant. Table 16 presents the SVCs that are in service in Case 5 and their respective reactive power output. In both tables, a positive value indicates power being injected into the network (generator convention).

Table 17 presents a summary of the total generation and load for each area in the system.

Table 15: Summary of Generation Dispatch for the 14-Generator System (Case 5)

Bus Number	Bus Name	Number of units in service	Pgen (MW)	Qgen (Mvar)
101	1_HPSGEN 15.000	3	–200	–25.99
201	2_BPSGEN 20.000	5	560	38.69
202	2_EPSGEN 20.000	4	480	67.22
203	2_VPSGEN 20.000	2	460	83.06
204	2_MPSGEN 20.000	4	534.41	55.24
301	3_LPSGEN 20.000	8	550	88.09
302	3_YPSGEN 20.000	3	342	43.81
401	4_TPSGEN 20.000	4	346	84.89
402	4_CPSGEN 20.000	3	280	45.42
403	4_SPSGEN 20.000	4	340	46.32
404	4_GPSGEN 20.000	5	272	50.41
501	5_NPSGEN 20.000	2	280	–35.18
502	5_TPSGEN 15.000	4	190	0.13
503	5_PPSGEN 15.000	2	87	3.53

Table 16: Summary of SVC Output for the 14-Generator System (Case 5)

Bus Number	Bus Name	Number of units in service	Qgen (Mvar)
205	2_ASV330 330.00	1	–118.32
313	3_RSV220 220.00	1	54.86
412	4_BW_275 275.00	1	22.83
507	5_PSV275 275.00	1	13.79
509	5_SSV275 275.00	1	–123.83

Table 17: Summary of Load and Generation for the 14-Generator System (Case 5)

```
    PTI INTERACTIVE POWER SYSTEM SIMULATOR--PSS(R)E     SAT, JUN 08 2013   7:47
LF_CASE05_R3_S  14 GEN, SIMPLIFIED MODEL OF 4-STATE SYSTEM          AREA TOTALS
MEDLD+PUMP AREA4->AREA2<-AREA3->AREA5 300-200-250                    IN MW/MVAR

                FROM      TO    TO BUS  TO LINE     FROM      TO            DESIRED
X-- AREA --X GENERATION  LOAD    SHUNT    SHUNT CHARGING  NET INT   LOSSES  NET INT

   1          -600.0    340.0      0.0      0.0      0.0   -940.0      0.0      0.0
               -78.0     35.0      0.0      0.0      0.0   -156.9     43.9

   2          7777.6   7160.0      0.0      0.0      0.0    420.1    197.5      0.0
               731.1    735.0   -728.3      0.0   1882.9    -60.5   2667.9

   3          5426.0   4872.0      0.0      0.0      0.0    449.4    104.6      0.0
               891.0    510.0      0.0      0.0   1931.8    153.8   2159.1

   4          4944.0   4500.0      0.0      0.0      0.0    319.7    124.3      0.0
               936.0    465.0     74.7      0.0   1451.0     86.3   1761.0

   5          1494.0   1725.0      0.0      0.0      0.0   -249.2     18.2      0.0
              -172.8    175.0      0.0      0.0    584.4    -22.7    259.2

TOTALS       19041.6  18597.0      0.0      0.0      0.0      0.0    444.6      0.0
              2307.4   1920.0   -653.6      0.0   5850.1      0.0   6891.1
```

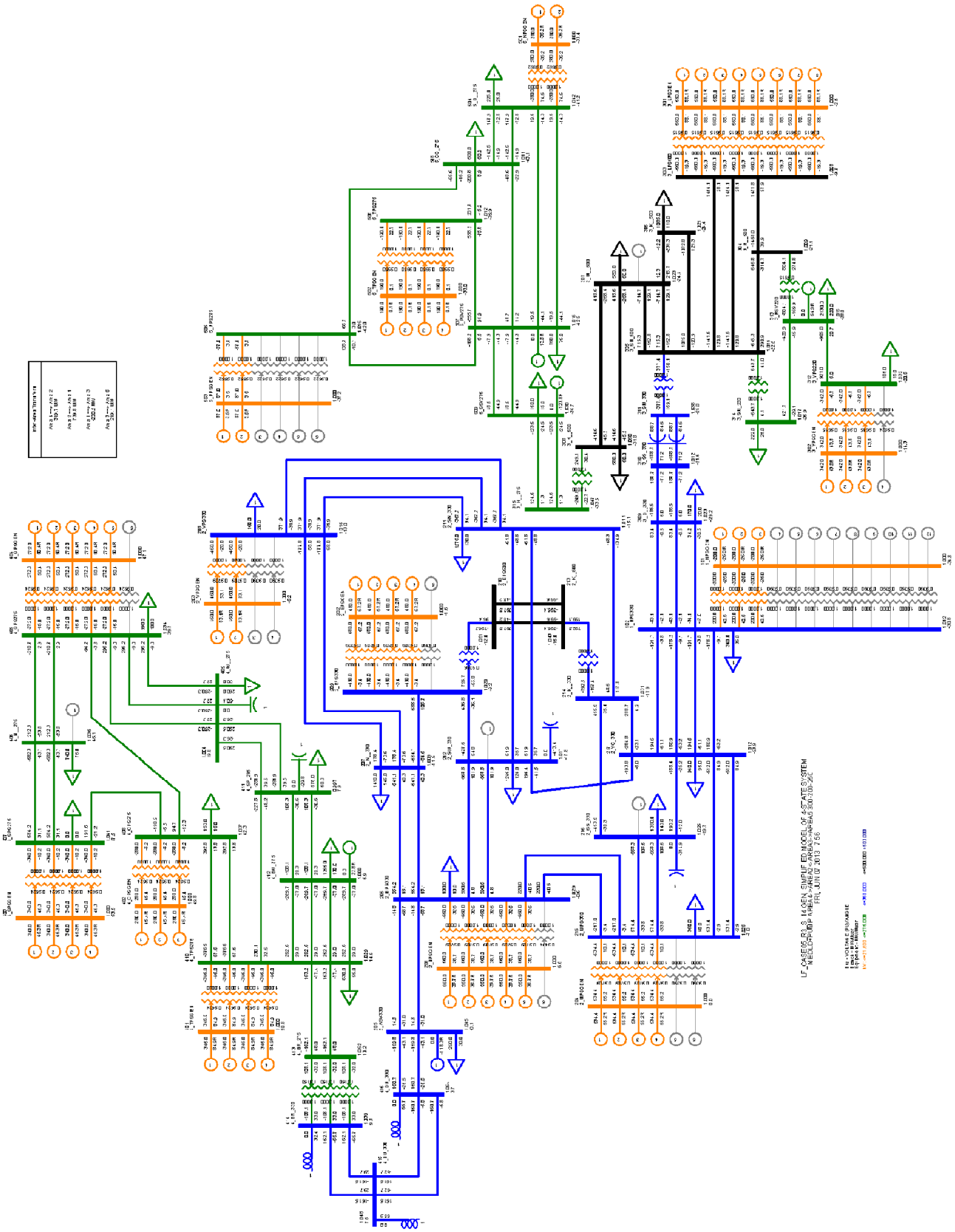

Figure 5: Case 5 Power Flow Solution

1.6 Result for Case 6 (Light Load – Minimum Transfers)

The power flow solution is shown in Figure 4. It is a very good match (within the power flow solution tolerance of 0.1 MVA) to the power flow results given in [1].

Table 18 summarizes the generation output in Case 6, indicating the active and reactive power output of an individual generation unit and the number of units in service at each power plant. Table 19 presents the SVCs that are in service in Case 6 and their respective reactive power output. In both tables, a positive value indicates power being injected into the network (generator convention).

Table 20 presents a summary of the total generation and load for each area in the system.

Table 18: Summary of Generation Dispatch for the 14-Generator System (Case 6)

Bus Number	Bus Name	Number of units in service	Pgen (MW)	Qgen (Mvar)
101	1_HPSGEN 15.000	2	0	–102.20
201	2_BPSGEN 20.000	3	560	–53.48
202	2_EPSGEN 20.000	3	490	–7.26
203	2_VPSGEN 20.000	3	490	3.74
204	2_MPSGEN 20.000	3	485.85	–61.23
301	3_LPSGEN 20.000	6	550	9.39
302	3_YPSGEN 20.000	2	393	–6.95
401	4_TPSGEN 20.000	3	350	–32.62
402	4_CPSGEN 20.000	3	270	4.67
403	4_SPSGEN 20.000	2	380	25.18
404	4_GPSGEN 20.000	3	245	3.88
501	5_NPSGEN 20.000	1	270	–42.20
502	5_TPSGEN 15.000	4	200	–9.70
503	5_PPSGEN 15.000	2	120	–11.17

Table 19: Summary of SVC Output for the 14-Generator System (Case 6)

Bus Number	Bus Name	Number of units in service	Qgen (Mvar)
205	2_ASV330 330.00	1	-29.41
313	3_RSV220 220.00	1	54.17
412	4_BW_275 275.00	1	–0.23
507	5_PSV275 275.00	1	–3.75
509	5_SSV275 275.00	1	–109.34

Table 20: Summary of Load and Generation for the 14-Generator System (Case 4)

```
    PTI INTERACTIVE POWER SYSTEM SIMULATOR--PSS(R)E     SAT, JUN 08 2013   7:38
LF_CASE04_R3_S   14-GEN. SIMPLIFIED MODEL OF THE 4-STATE            AREA TOTALS
SYSTEM: LIGHTLD AREA4<-AREA2->AREA3->AREA5 200-200-200MW             IN MW/MVAR

                FROM      TO    TO BUS  TO LINE     FROM      TO            DESIRED
X-- AREA --X GENERATION  LOAD    SHUNT    SHUNT CHARGING  NET INT   LOSSES  NET INT

   1             0.0    270.0      0.0      0.0      0.0   -270.0      0.0      0.0
              -194.7     30.0      0.0      0.0      0.0   -231.5      6.8

   2          6547.1   5775.0      0.0      0.0      0.0    662.5    109.7      0.0
              -316.0    620.0   -739.9      0.0   1893.1    -59.5   1756.5

   3          4090.0   4027.0      0.0      0.0      0.0      0.3     62.7      0.0
               167.9    450.0      0.0      0.0   1919.5    166.0   1471.4

   4          3151.0   3302.0      0.0      0.0      0.0   -192.8     41.8      0.0
               -91.3    345.0     69.8      0.0   1431.6    133.7    791.9

   5          1250.0   1432.0      0.0      0.0      0.0   -199.9     17.9      0.0
              -221.6    150.0      0.0      0.0    579.5     -8.6    216.5

TOTALS       15038.1  14806.0      0.0      0.0      0.0      0.0    232.1      0.0
              -655.7   1595.0   -670.0      0.0   5823.8      0.0   4243.2
```

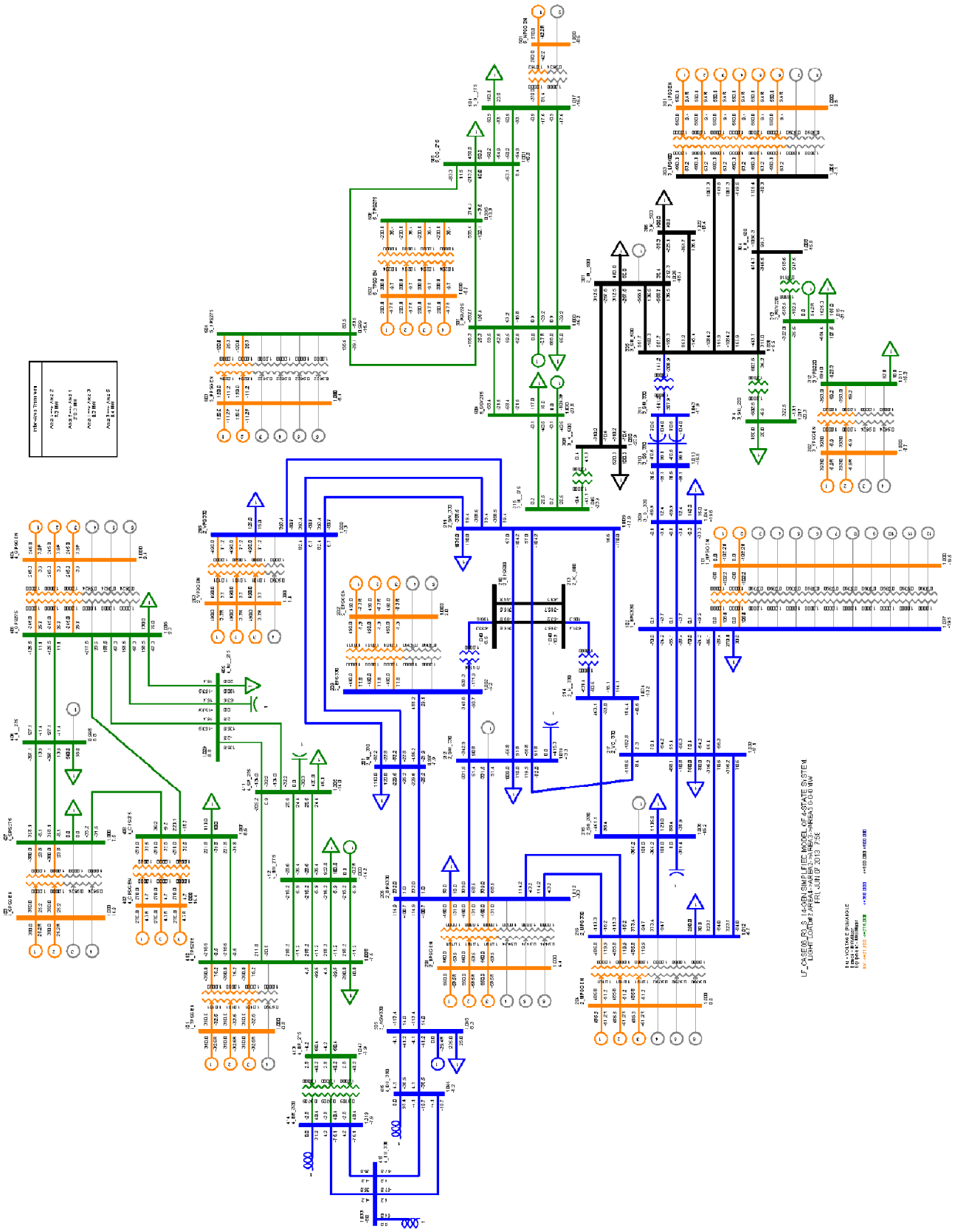

Figure 6: Case 6 Power Flow Solution

2. Short-Circuit Results

Table XX presents the calculated Thevenin impedance seen from the high-voltage bus of each plant, calculated with all machines in the plant out of service. Thus, the calculated Thevenin Impedance is the system equivalent impedance seen from the high-voltage bus of the plant (point of interconnection of the plant). These Thevenin impedances were calculated for all 6 cases, and the minimum and maximum impedances from each plant are highlighted in red and blue, respectively. As it should be expected, the minimum equivalent impedances are associated with either the Peak Load (Case 3) or the Heavy Load (Case 1) scenarios. The maximum equivalent impedances are associated with the Light Load (Case 4 or Case 6) scenarios.

Table YY summarizes these results, showing the maximum and minimum three-phase fault MVA levels at the high-voltage bus of each plant. The maximum and minimum fault MVA levels are calculated from the minimum and maximum equivalent Thevenin impedances shown in Table XX.

These results could be used for comparison of results obtained with single-machine vs. infinite-bus (SMIB) equivalents. Table WW presents the total equivalent Thevenin impedance, including the impedances of the generator step-up transformers, for such SMIB equivalents.

Table 21: Summary of Plant HV Bus Equivalent Thevenin Impedance

generator		GSU	CASE 1		CASE 2		CASE 3	
		X	R	X	R	X	R	X
bus no.	MVA	%	%	%	%	%	%	%
101	333.3	3.6	0.229	1.999	0.23	2.034	0.229	1.998
201	666.7	2.4	0.103	1.155	0.105	1.261	0.107	1.198
202	555.6	2.88	0.089	1.17	0.093	1.276	0.1	1.273
203	555.6	3.06	0.1	1.121	0.102	1.205	0.101	1.11
204	666.7	2.4	0.142	1.48	0.143	1.555	0.14	1.446
301	666.7	2.4	0.227	2.888	0.216	2.756	0.215	2.612
302	444.4	3.38	0.263	3.406	0.26	3.346	0.262	3.317
401	444.4	3.38	0.314	3.562	0.314	3.568	0.314	3.562
402	333.2	5.1	0.17	2.513	0.17	2.514	0.17	2.513
403	444.4	3.38	0.163	2.91	0.163	2.91	0.163	2.91
404	333.3	5.1	0.161	2.463	0.161	2.463	0.161	2.463
501	333.3	5.1	0.977	3.508	0.973	3.338	0.971	3.199
502	250	6.4	0.249	3.374	0.221	3.119	0.202	2.919
503	166.7	10	0.218	3.053	0.218	3.052	0.218	3.051

Table XX (cont.): Summary of Plant HV Bus Equivalent Thevenin Impedance

gen. bus no.	CASE 4 R %	CASE 4 X %	CASE 5 R %	CASE 5 X %	CASE 6 R %	CASE 6 X %
101	0.23	2.078	0.23	2.046	0.23	2.115
201	0.105	1.309	0.106	1.301	0.106	1.355
202	0.092	1.315	0.099	1.354	0.092	1.384
203	0.107	1.305	0.102	1.205	0.106	1.369
204	0.146	1.647	0.143	1.576	0.148	1.704
301	0.253	3.282	0.227	2.933	0.251	3.282
302	0.266	3.514	0.26	3.347	0.265	3.514
401	0.319	3.874	0.314	3.605	0.31	3.819
402	0.174	2.869	0.17	2.561	0.177	3.037
403	0.185	3.599	0.167	3.028	0.18	3.415
404	0.168	2.788	0.161	2.463	0.178	2.918
501	1.026	4.924	0.992	3.997	0.992	4
502	0.472	4.816	0.357	4.155	0.304	5.125
503	0.253	3.381	0.218	3.052	0.18	3.468

	Maximum equivalent impedance
	Minimum equivalent impedance

Table 22: Summary of Total Plant HV Equivalent Three-Phase Fault MVA

generator			HV bus fault level	
LV bus no.	rated MVA	HV bus no.	MAX MVA	MIN MVA
101	333.3	102	4972.5	4700.4
201	666.7	206	8623.8	7357.6
202	555.6	209	8522.4	7209.5
203	555.6	208	8971.9	7282.8
204	666.7	215	6883.4	5846.5
301	666.7	303	3815.6	3037.9
302	444.4	312	3005.4	2837.6
401	444.4	410	2796.6	2572.6
402	333.2	408	3970.2	3287.1
403	444.4	407	3431.0	2774.9
404	333.3	405	4051.4	3420.6
501	333.3	504	2991.2	1988.2
502	250	505	3417.7	1947.8
503	166.7	506	3269.3	2879.6

Table 23: Summary of Total Thevenin Impedance for Single-Machine vs. Infinite Bus Equivalent

generator		STRONG		WEAK	
		R	X	R	X
bus no.	MVA	%	%	%	%
101	333.3	0.763	18.66	0.767	19.05
201	666.7	0.687	23.70	0.707	25.03
202	555.6	0.494	22.50	0.511	23.69
203	555.6	0.561	23.17	0.589	24.61
204	666.7	0.933	25.64	0.987	27.36
301	666.7	1.433	33.42	0.767	37.88
302	444.4	1.164	29.76	0.700	30.64
401	444.4	1.395	30.85	0.511	32.24
402	333.2	0.566	25.37	0.590	27.11
403	444.4	0.724	27.95	0.973	31.01
404	333.3	0.537	25.21	0.593	26.72
501	333.3	3.236	27.66	1.182	33.41
502	250	0.505	23.30	0.760	28.81
503	166.7	0.363	21.76	0.300	22.45

3. Dynamic Simulation Models

The models and associated parameters for the dynamic simulation models used in this PSS/E setup are described in this Section. All generation units in a given power plant are considered sister units and thus represented by exactly the same dynamic models and parameters.

3.1 Synchronous Machines

The generator model to represent the salient pole units is the PSS/E model GENSAE, shown in the block diagram in Figure XX. Details about the implementation of the model are available in the software documentation [2]. This is a 5th order dynamic model with the saturation function represented as a geometric (exponential) function. Another important characteristic of this model is the consideration of some saturation in the q-axis.

The details associated with the representation of the saturation of the generators should not dramatically interfere with the results of a small-signal (linearized) analysis of the system performance. On the other hand, the proper representation of saturation is extremely important for transient stability and the determination of rated and ceiling conditions (minimum and maximum generator field current and generator field voltage) for the excitation system.

To avoid significant complications in the analysis and comparison of results from different software, it should be noted that magnetic saturation is practically ignored in all models, with the parameters S(1.0) and S(1.2) set to very small values. These parameters are not typical, but were rather selected to intentionally ignore the effects of the magnetic saturation in the results derived from this benchmark test system.

The round-rotor machines are represented by the PSS/E model GENROE, shown in the block diagram of Figure YY [2]. This is a 6th order dynamic model and, like the GENSAE model, applies a geometric (exponential) function to represent the magnetic saturation of the machine. Similarly to the procedure used for the salient pole units, the parameters S(1.0) and S(1.2) that describe the magnetic saturation were set to very small values and therefore the magnetic saturation is practically ignored.

Table WW presents the calculated rated field current for these generator models. This calculation comprises the initialization of the generator models at full (rated) power output for each machine, considering their rated power factor given in Table 1. It should be noted that in PSS/E models, due to the choice of base values for generator field voltage and generator field current, these variables are numerically the same, in steady state, when expressed in pu.

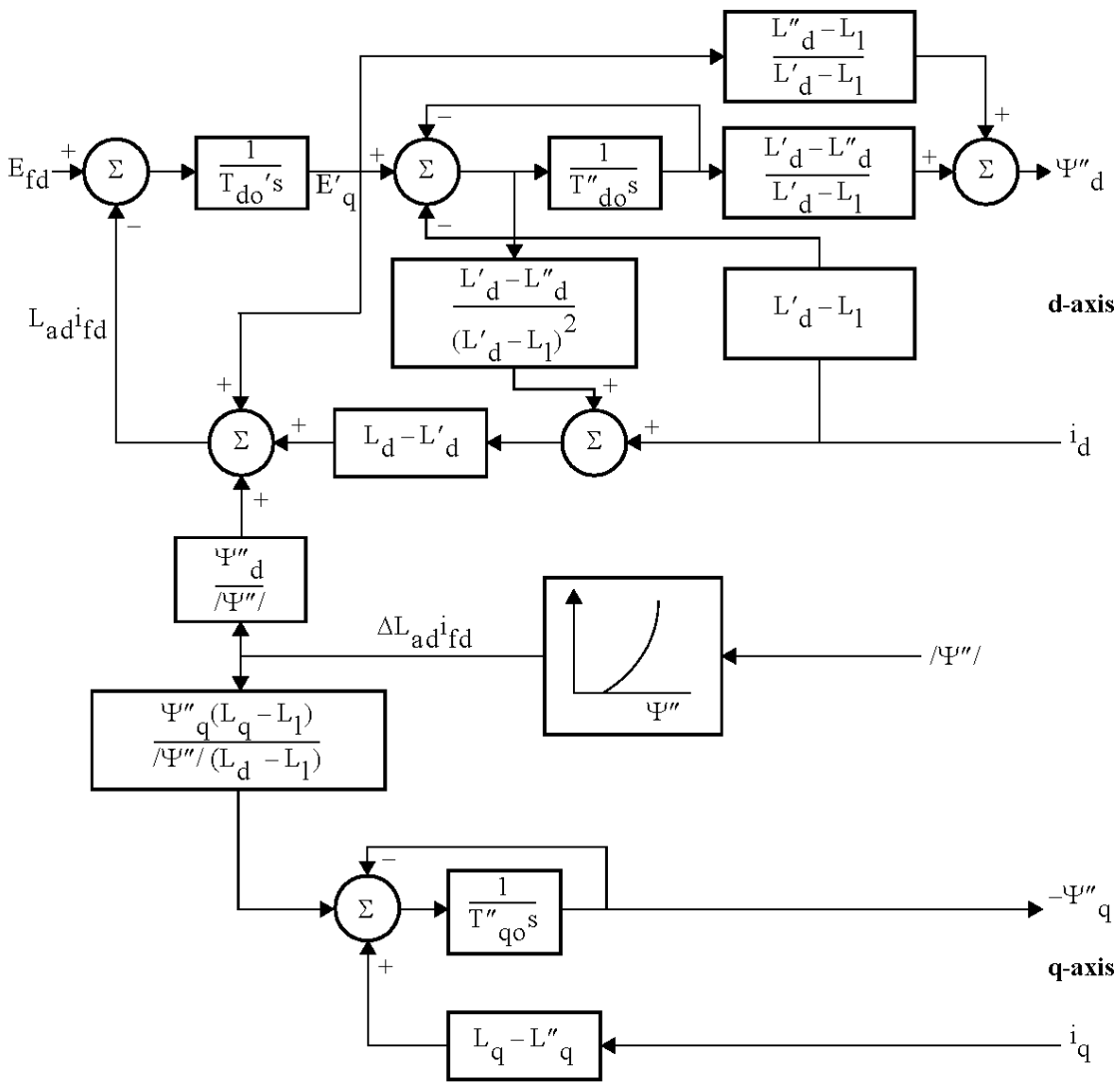

Figure 6: Block Diagram for the PSS/E Model GENSAE

Table 24: Dynamic Model Data for Salient Pole Units (PSS/E Model GENSAE)

		BUSES	
PARAMETERS		101	302
Description	**Symbol**	1_HPSGEN 15.0 kV	3_YPSGEN 20.0 kV
Rated apparent power (MVA)	MBASE	333.3	444.4
d-axis open circuit transient time constant (s)	T'_{do}	8.5	7.5
d-axis open circuit sub-transient time constant (s)	T''_{do}	0.05	0.04
q-axis open circuit sub-transient time constant (s)	T''_{qo}	0.2	0.25
Inertia (MW.s/MVA)	H	3.6	3.5
Speed damping (pu)	D	0	0
d-axis synchronous reactance (pu)	X_d	1.1	2
q-axis synchronous reactance (pu)	X_q	0.65	1.8
d-axis transient reactance (pu)	X'_d	0.25	0.25
sub-transient reactance (pu)	$X''_d = X''_q$	0.25	0.2
Leakage reactance (pu)	X_ℓ	0.14	0.15
Saturation factor at 1.0 pu voltage	S(1.0)	0.001	0.001
Saturation factor at 1.2 pu voltage	S(1.2)	0.01	0.01

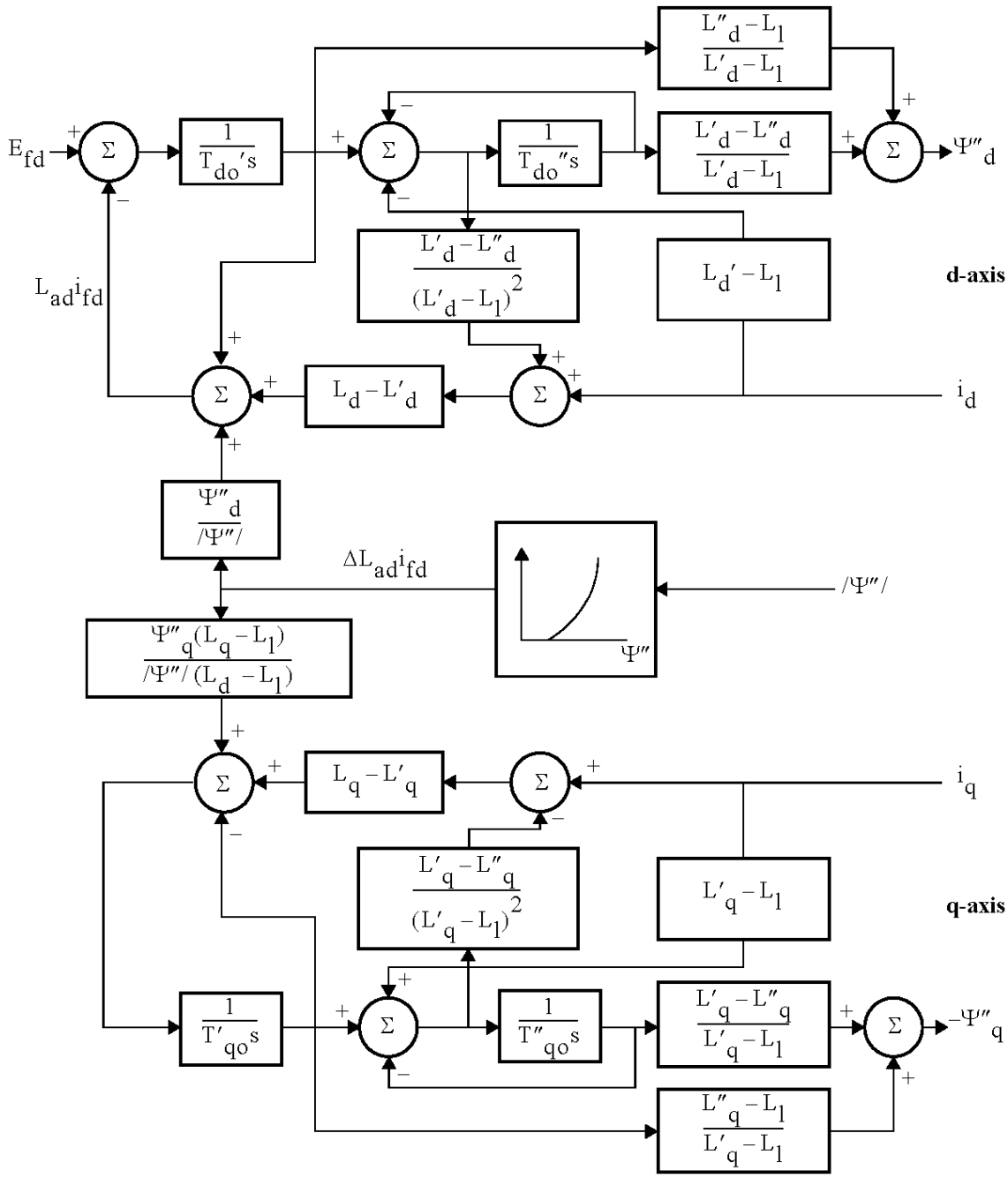

Figure 6: Block Diagram for the PSS/E Model GENROE

Table 25: Dynamic Model Data for Round Rotor Units (PSS/E Model GENROE)

		BUSES		
PARAMETERS		201	202	203
Description	**Symbol**	2_BPSGEN 20.0 kV	2_EPSGEN 20.0 kV	2_VPSGEN 20.0 kV
Rated apparent power (MVA)	MBASE	666.7	555.6	555.6
d-axis open circuit transient time constant (s)	T'_{do}	8.5	4.5	5
d-axis open circuit sub-transient time constant (s)	T''_{do}	0.04	0.04	0.03
q-axis open circuit transient time constant (s)	T'_{qo}	0.3	1.5	2
q-axis open circuit sub-transient time constant (s)	T''_{qo}	0.08	0.06	0.25
Inertia (MW.s/MVA)	H	3.2	2.8	2.6
Speed damping (pu)	D	0	0	0
d-axis synchronous reactance (pu)	X_d	1.8	2.2	2.3
q-axis synchronous reactance (pu)	X_q	1.75	2.1	1.7
d-axis transient reactance (pu)	X'_d	0.3	0.3	0.3
q-axis transient reactance (pu)	X'_q	0.7	0.5	0.4
sub-transient reactance (pu)	$X''_d = X''_q$	0.21	0.2	0.25
Leakage reactance (pu)	X_ℓ	0.2	0.17	0.2
Saturation factor at 1.0 pu voltage	S(1.0)	0.001	0.001	0.001
Saturation factor at 1.2 pu voltage	S(1.2)	0.01	0.01	0.01

Table YY (cont.): Dynamic Model Data for Round Rotor Units (PSS/E Model GENROE)

	BUSES				
	204	301	401	402	403
Symbol	2_MPSGEN 20.0 kV	3_LPSGEN 20.0 kV	4_TPSGEN 20.0 kV	4_CPSGEN 20.0 kV	4_SPSGEN 20.0 kV
MBASE	666.7	666.7	444.4	333.3	444.4
T'_{do}	8.5	7.5	5	6.5	5
T''_{do}	0.04	0.04	0.03	0.035	0.03
T'_{qo}	0.3	0.85	2	1.4	2
T''_{qo}	0.08	0.12	0.25	0.04	0.25
H	3.2	2.8	2.6	3	2.6
D	0	0	0	0	0
X_d	1.8	2.7	2.3	1.9	2.3
X_q	1.75	1.5	1.7	1.8	1.7
X'_d	0.3	0.3	0.3	0.3	0.3
X'_q	0.7	0.85	0.4	0.55	0.4
$X''_d = X''_q$	0.21	0.25	0.25	0.26	0.25
X_ℓ	0.2	0.2	0.2	0.2	0.2
S(1.0)	0.001	0.001	0.001	0.001	0.001
S(1.2)	0.01	0.01	0.01	0.01	0.01

Table YY (cont.): Dynamic Model Data for Round Rotor Units (PSS/E Model GENROE)

	BUSES			
	404	501	502	503
Symbol	4_GPSGEN 20.0 kV	5_NPSGEN 20.0 kV	5_TPSGEN 15.0 kV	5_PPSGEN 15.0 kV
MBASE	333.3	333.3	250	166.7
T'_{do}	9	7.5	7.5	5
T''_{do}	0.04	0.025	0.04	0.022
T'_{qo}	1.4	1.5	3	1
T''_{qo}	0.13	0.1	0.2	0.035
H	4	3.5	4	7.5
D	0	0	0	0
X_d	2.2	2.2	2	2.3
X_q	1.4	1.7	1.5	2
X'_d	0.32	0.3	0.3	0.25
X'_q	0.75	0.8	0.8	0.35
$X''_d = X''_q$	0.24	0.24	0.22	0.17
X_ℓ	0.18	0.15	0.2	0.15
S(1.0)	0.001	0.001	0.001	0.001
S(1.2)	0.01	0.01	0.01	0.01

Table 26: Rated Conditions for Generator Models

BUS		RATED CONDITIONS					
number	**name**	**terminal voltage kV**	**apparent power MVA**	**power factor**	**active power MW**	**reactive power MVAr**	**field current pu**
101	1_HPSGEN	15	333.3	0.9	299.97	145.28	1.762
201	2_BPSGEN	20	666.7	0.9	600.03	290.61	2.4136
202	2_EPSGEN	20	555.6	0.9	500.04	242.18	2.7881
203	2_VPSGEN	20	555.6	0.9	500.04	242.18	2.8752
204	2_MPSGEN	20	666.7	0.9	600.03	290.61	2.4136
301	3_LPSGEN	20	666.7	0.9	600.03	290.61	3.2275
302	3_YPSGEN	20	444.4	0.9	399.96	193.71	2.5989
401	4_TPSGEN	20	444.4	0.9	399.96	193.71	2.8752
402	4_CPSGEN	20	333.3	0.9	299.97	145.28	2.508
403	4_SPSGEN	20	444.4	0.9	399.96	193.71	2.8752
404	4_GPSGEN	20	333.3	0.9	299.97	145.28	2.7672
501	5_NPSGEN	20	333.3	0.9	299.97	145.28	2.7827
502	5_TPSGEN	15	250	0.8	200	150	2.7202
503	5_PPSGEN	15	166.7	0.9	150.03	72.66	2.8806

3.2 Excitation Systems

Only two excitation systems models are used in this benchmark system, one to represent static excitation systems and another for DC rotating exciters.

It should be noted that all generation units at a given plant are connected in parallel to the same low voltage bus. This is not the usual arrangement, considering that there is one individual step-up transformer for each generation unit represented in these cases. Besides, when multiple generation units are connected to the same terminal bus, it is necessary to have reactive current compensation (droop) to make sure that these units properly share the reactive power output. The reactive current compensation is represented in PSS/E by the IEEEVC model, but has not been incorporated to the case.

3.2.1 Static Excitation System

The model ST1A, as defined in [3], will be used to represent the static excitation systems. The block diagram of the PSS/E model ESST1A [2] is shown in Figure XX. The parameters for the excitation systems of the different generation units that are represented by the ESST1A model are presented in Table YY.

The limits (parameters V_{Imax}, V_{Imin}, V_{Amax}, V_{Amin}, V_{Rmax} and V_{Rmin}) in the model have been ignored, and thus the numerical values for these parameters have been set accordingly. These limits are irrelevant for the small-signal analysis of the system dynamic response. On the other hand, these limits are a critical part of the model and the expected response of the excitation system following large system disturbances such as faults. Therefore, these parameters should be set to representative values before this benchmark system can be used for transient stability simulations.

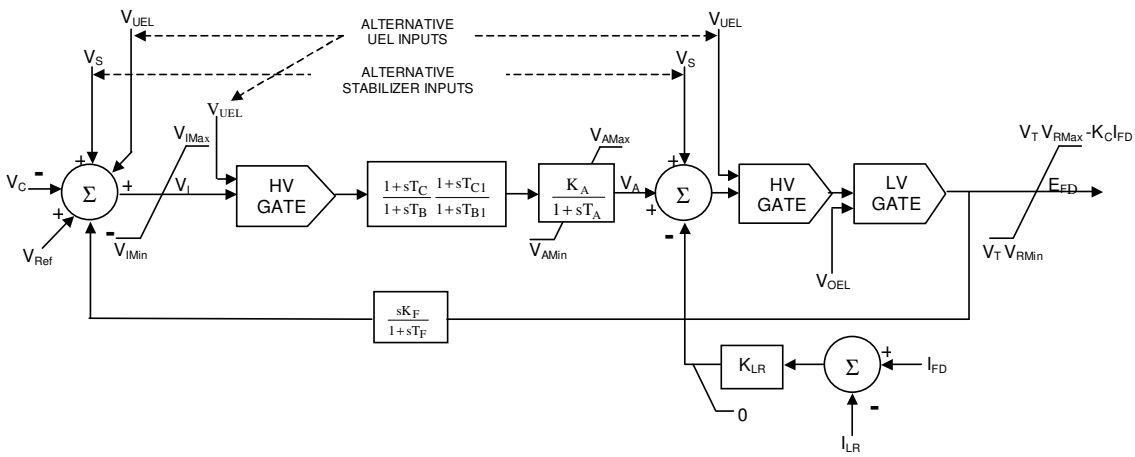

Figure 6: Block Diagram for the PSS/E Model ESST1A

Table 27: Dynamic Model Data for Static Excitation Systems (PSS/E Model ESST1A)

		BUSES		
PARAMETERS		101	201	203
Description	**Symbol**	1_HPSGEN 15.0 kV	2_BPSGEN 20.0 kV	2_VPSGEN 20.0 kV
Voltage transducer time constant (s)	T_R	0	0	0
Max. voltage error (pu)	V_{Imax}	99	99	99
Min. voltage error (pu)	V_{Imin}	-99	-99	-99
TGR block 1 numerator time constant (s)	T_C	2.5	0.5	0.35
TGR block 1 denominator time constant (s)	T_B	13.25	1.12	0.7
TGR block 2 numerator time constant (s)	T_{C1}	1	1	1
TGR block 1 denominator time constant (s)	T_{B1}	1	1	1
AVR steady state gain (pu)	K_A	200	400	300
Rectifier bridge equivalent time constant (s)	T_A	0.1	0.02	0.01
Max. AVR output (pu)	V_{Amax}	99	99	99
Min. AVR output (pu)	V_{Amin}	-99	-99	-99
Max. rectifier bridge output (pu)	V_{Rmax}	99	99	99
Min. rectifier bridge output (pu)	V_{Rmin}	-99	-99	-99
Commutation factor for rectifier bridge (pu)	K_C	0	0	0
Stabilizer feedback gain (pu)	K_F	0	0	0
Stabilizer feedback time constant (s)	T_F	1	1	1
Field current limiter gain (pu)	K_{LR}	0	0	0
Field current instantaneous limit (pu)	I_{LR}	3	3	3

Table XX (cont.): Dynamic Model Data for Static Excitation Systems (PSS/E Model ESST1A)

	BUSES			
	204	301	401	402
Symbol	2_MPSGEN 20.0 kV	3_LPSGEN 20.0 kV	4_TPSGEN 20.0 kV	4_CPSGEN 20.0 kV
T_R	0	0	0	0.02
V_{Imax}	99	99	99	99
V_{Imin}	-99	-99	-99	-99
T_C	0.5	1.14	4	1.52
T_B	1.12	6.42	40	9.8
T_{C1}	1	1	1	1
T_{B1}	1	1	1	1
K_A	400	400	300	300
T_A	0.02	0.05	0.1	0.05
V_{Amax}	99	99	99	99
V_{Amin}	-99	-99	-99	-99
V_{Rmax}	99	99	99	99
V_{Rmin}	-99	-99	-99	-99
K_C	0	0	0	0
K_F	0	0	0	0
T_F	1	1	1	1
K_{LR}	0	0	0	0
I_{LR}	3	3	3	3

Table XX (cont.): Dynamic Model Data for Static Excitation Systems (PSS/E Model ESST1A)

	BUSES			
	403	404	502	503
Symbol	4_SPSGEN 20.0 kV	4_GPSGEN 20.0 kV	5_TPSGEN 15.0 kV	5_PPSGEN 15.0 kV
T_R	0	0	0	0
V_{Imax}	99	99	99	99
V_{Imin}	-99	-99	-99	-99
T_C	0.35	0.136	1.4	0.2
T_B	0.7	0.023	16	0.8
T_{C1}	1	1	0.6	1
T_{B1}	1	1	0.05	1
K_A	300	250	400	300
T_A	0.01	0.2	0.5	0.01
V_{Amax}	99	99	99	99
V_{Amin}	-99	-99	-99	-99
V_{Rmax}	99	99	99	99
V_{Rmin}	-99	-99	-99	-99
K_C	0	0	0	0
K_F	0	0	0	0
T_F	1	1	1	1
K_{LR}	0	0	0	0
I_{LR}	3	3	3	3

3.2.2 DC Rotating Excitation System

The model DC1A [3] will be used to represent the static excitation systems. The block diagram of the PSS/E model ESDC1A [2] is shown in Figure YY. The parameters for the excitation systems of the different generation units that are represented by the ESDC1A model are presented in Table ZZ.

As described for the static excitation system model, the limits (parameters V_{Rmax} and V_{Rmin}) in the model have been ignored, and thus the numerical values for these parameters have been set accordingly.

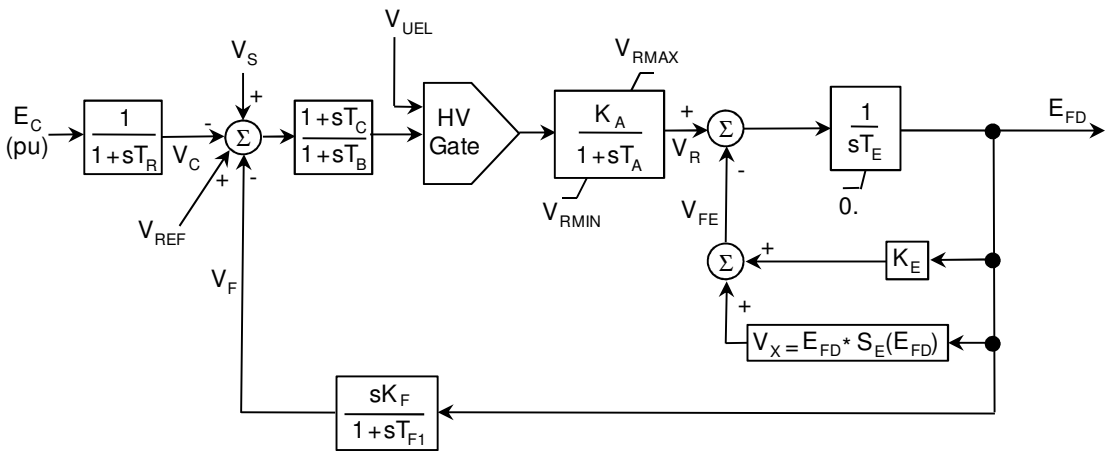

Figure 6: Block Diagram for the PSS/E Model ESDC1A

Table 28: Dynamic Model Data for DC Rotating Excitation Systems (PSS/E Model ESDC1A)

		BUSES		
PARAMETERS		202	302	501
Description	**Symbol**	2_EPSGEN 20.0 kV	3_YPSGEN 20.0 kV	5_NPSGEN 20.0 kV
Voltage transducer time constant (s)	T_R	0	0	0
AVR steady state gain (pu)	K_A	400	200	1000
AVR equivalent time constant (s)	T_A	0.02	0.05	0.04
TGR block 1 denominator time constant (s)	T_B	1	1	1
TGR block 2 numerator time constant (s)	T_C	1	1	1
Max. AVR output (pu)	V_{Rmax}	99	99	99
Min. AVR output (pu)	V_{Rmin}	-99	-99	-99
Exciter feedback time constant (pu)	K_E	1	1	1
Exciter time constant (s)	T_E	1	1.333	0.87
Stabilizer feedback gain (pu)	K_F	0.029	0.02	0.004
Stabilizer feedback time constant (s)	T_{F1}	1	0.8	0.27
Switch		0	0	0
Exciter saturation point 1 (pu)	E_1	4	4	4
Exciter saturation factor at point 1	$S_E(E_1)$	0.001	0.001	0.001
Exciter saturation point 2 (pu)	E_2	6	6	6
Exciter saturation factor at point 2	$S_E(E_2)$	0.01	0.01	0.01

3.3 Power System Stabilizers

The model PSS1A [3] will be used to represent the power system stabilizers. The block diagram of the PSS/E model IEEEST [2] is shown in Figure XX. The parameters for the power system stabilizers of the different generation units that are represented by the IEEEST model are presented in Table WW.

The output limits were set to +/– 10%, while the logic to switch off the PSS for voltages outside a normal operation range has been ignored (parameters V_{CU} and V_{CL} set to zero).

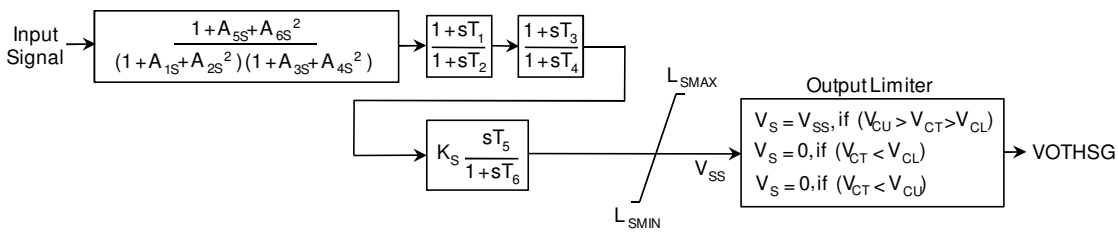

Table 29: Dynamic Model Data for Power System Stabilizers (PSS/E Model IEEEST)

		BUSES		
PARAMETERS		101	201	202
Description	**Symbol**	1_HPSGEN 15.0 kV	2_BPSGEN 20.0 kV	2_EPSGEN 20.0 kV
2nd order denominator coefficient	A_1	0.0133	0.0133	0.0067
2nd order denominator coefficient	A_2	0	0	0
2nd order numerator coefficient	A_3	0	0	0
2nd order numerator coefficient	A_4	0	0	0
2nd order denominator coefficient	A_5	0.3725	0.128	0.04
2nd order denominator coefficient	A_6	0.0384	0.0064	0
1st lead-lag numerator time constant (s)	T_1	1	1	0.286
1st lead-lag denominator time constant (s)	T_2	1	1	0.0067
2nd lead-lag numerator time constant (s)	T_3	1	1	0.111
2nd lead-lag denominator time constant (s)	T_4	1	1	0.0067
Washout block numerator time constant (s)	T_5	7.5	7.5	7.5
Washout block denominator time constant (s)	T_6	7.5	7.5	7.5
PSS gain (pu)	K_S	15.38	5.56	4.66
PSS max. output (pu)	L_{Smax}	0.1	0.1	0.1
PSS min. output (pu)	L_{Smin}	-0.1	-0.1	-0.1
Upper voltage limit for PSS operation (pu)	V_{CU}	0	0	0
Lower voltage limit for PSS operation (pu)	V_{CL}	0	0	0

Table WW (cont.): Dynamic Model Data for Power System Stabilizers (PSS/E Model IEEEST)

	BUSES					
	203	204	301	302	401	402
Symbol	2_VPSGEN 20.0 kV	2_MPSGEN 20.0 kV	3_LPSGEN 20.0 kV	3_YPSGEN 20.0 kV	4_TPSGEN 20.0 kV	4_CPSGEN 20.0 kV
A_1	0	0.0133	0.0133	0.0133	0	0
A_2	0	0	0	0	0	0
A_3	0	0	0	0	0	0
A_4	0	0	0	0	0	0
A_5	0	0.1	0.1684	0.5091	0	0
A_6	0	0.0051	0.0118	0.1322	0	0
T_1	0.0708	0.01	1	0.05	0.2083	0.2777
T_2	0.0067	0.0067	1	0.0067	0.0067	0.0067
T_3	0.0292	0	1	0	0.2083	0.1
T_4	0.0067	0	1	0	0.0067	0.0067
T_5	7.5	7.5	7.5	7.5	7.5	7.5
T_6	7.5	7.5	7.5	7.5	7.5	7.5
K_S	5.72	6.66	12.5	5.96	7.14	4.7
L_{Smax}	0.1	0.1	0.1	0.1	0.1	0.1
L_{Smin}	-0.1	-0.1	-0.1	-0.1	-0.1	-0.1
V_{CU}	0	0	0	0	0	0
V_{CL}	0	0	0	0	0	0

Table WW (cont.): Dynamic Model Data for Power System Stabilizers (PSS/E Model IEEEST)

	BUSES				
	403	404	501	502	503
Symbol	4_SPSGEN 20.0 kV	4_GPSGEN 20.0 kV	5_NPSGEN 20.0 kV	5_TPSGEN 15.0 kV	5_PPSGEN 15.0 kV
A_1	0	0.0133	0.0133	0.0133	0
A_2	0	0	0	0	0
A_3	0	0	0	0	0
A_4	0	0	0	0	0
A_5	0	0.1	0.1684	0.5091	0
A_6	0	0.0051	0.0118	0.1322	0
T_1	0.0708	0.01	1	0.05	0.2777
T_2	0.0067	0.0067	1	0.0067	0.0067
T_3	0.0292	0	1	0	0.1
T_4	0.0067	0	1	0	0.0067
T_5	7.5	7.5	7.5	7.5	7.5
T_6	7.5	7.5	7.5	7.5	7.5
K_S	5.72	6.66	12.5	5.96	4.7
L_{Smax}	0.1	0.1	0.1	0.1	0.1
L_{Smin}	-0.1	-0.1	-0.1	-0.1	-0.1
V_{CU}	0	0	0	0	0
V_{CL}	0	0	0	0	0

1.1 Static Var Compensators

4. Simulation Results

The results presented in this report correspond to time-domain simulations of different disturbances. The main objective associated with the selection of these disturbances was to assess the system damping and the effectiveness of the proposed stabilizers in providing damping to these oscillations.

The first simulation consists of a 2% step change in voltage reference at all (online) generation units at bus 101 (1_HPSGEN 15.0 kV). This is a typical test that excites the local mode of oscillation of this power plant against the rest of the system.

The second simulation consists of a 2% step change in voltage reference applied at only one generation unit at bus 101 (1_HPSGEN 15.0 kV). This is a typical field test that can be easily applied and recorded in the field and is part of the commissioning tests of excitation systems and power system stabilizers. The difference, compared to the previous case, is that the change in voltage reference of a single machine provides a much smaller excitation to the plant local mode of oscillation. Besides, this test could also excite an intra-plant mode.

The third simulation considers the switching on of a 100 MVAr reactor at bus 414 (4_BR_330 330 kV), which is part of the interconnection system between the North and the South of the system. The reactor is turned on at time=0.95 seconds, and turned off 50 ms later (at 1.0 second). This disturbance should excite inter-area oscillation modes, particularly those in which Area 4 has significant participation.

5. References

[1] Mike Gibbard and David Vowles, "*Simplified 14-Generator Model of the SE Australian Power System"*, revision 3, June 2010.

[2] Siemens PTI, "*PSS/E 32.0 Online Documentation*", June 2009.

[3] IEEE/PES Energy Development and Power Generation Committee, *IEEE Recommended Practice for Excitation System Models for Power System Stability Studies*, IEEE Std. 421.5(2005), April 2006.