IEEE PES Task Force on Benchmark Systems for Stability Controls

Report on the 4-generator system | CEPEL Software Package

May 25th , 2015

Jhonatan Andrade dos Santos and Rodrigo Andrade Ramos

This report presents a study about the stability (both from the small and large perturbation perspectives) of the system with two-areas and 4-generators proposed in [1], using the following software developed by CEPEL: ANARERE® [2], ANATEM® [3] and PACDYN® [4]. The objectives of this report are to document the data setup and to provide a basis for comparison of results from other software, so the system can be validated as a benchmark.

1. Power Flow

The power flow solution is show in Figure 1, with the one line diagram of the system. The bus data, including the voltage magnitudes and angles from the power flow solution (resulting from ANAREDE) are presented in Table 1.

The parameters of all transmission lines are r = 0.0001 pu/km, x_L = 0.001 pu/km and b_c = 0.00175 pu/km, in per unit on 100 MVA and 230 kV base. The lines are represented by π sections and their detailed data are presented in Table 2. The charging shown in Table 2 corresponds to the total line charging.

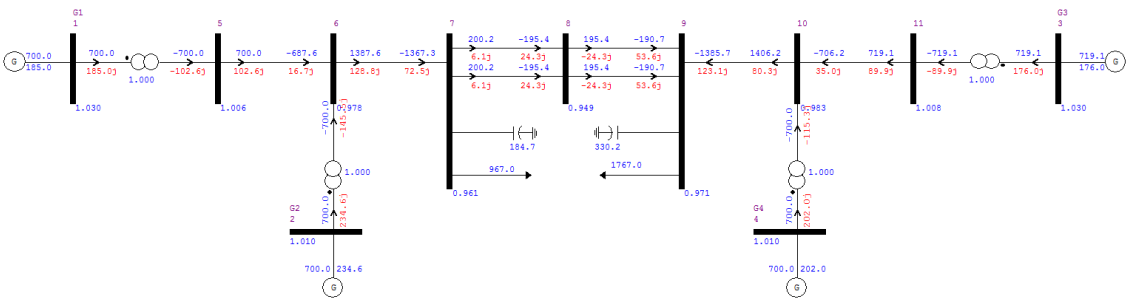

Figure 1: Power Flow Solution

Table 1: Bus Data and Power Flow Solution

Bus Number	Base kV	Bus type	Voltage (pu)	Angle (deg)
1	20.0	PV	1.030	20.10
2	20.0	PV	1.010	10.30
3	20.0	Swing	1.030	-7.00
4	20.0	PV	1.010	-17.00
5	230.0	PQ	1.006	13.60
6	230.0	PQ	0.978	3.52
7	230.0	PQ	0.961	-4.90
8	230.0	PQ	0.949	-19.00
9	230.0	PQ	0.971	-32.00
10	230.0	PQ	0.983	-24.00
11	230.0	PQ	1.008	-14.00

Table 2: Transmission Line Data

From Bus	To Bus	ckt id	Length (km)	R (%)	X (%)	Charging (Mvar)
5	6	1	25	0.25	2.5	4.3750
6	7	1	10	0.10	1.0	1.7500
7	8	1	110	1.10	11.0	19.2500
7	8	2	110	1.10	11.0	19.2500
8	9	1	110	1.10	11.0	19.2500
8	9	2	110	1.10	11.0	19.2500
9	10	1	10	0.1	1.0	1.7500
10	11	1	25	0.25	2.5	4.3750

The generator step-up transformers (GSU) are explicitly represented in the case. The GSUs are all rated at 900 MVA and have a leakage reactance of 15% on the transformer base. Winding resistance and magnetizing currents are neglected. Table 3 presents the GSU data.

There are loads and capacitor banks connected to buses 7 and 9. Table 4 presents the associated data, in which the values are presented at nominal voltage (1.0 pu voltage). For dynamics simulation, the active loads are presented by a constant current characteristic and the reactive loads by constant admittance characteristic (100%I, 100%Z for P and Q, respectively).

The complete power flow solution obtained by ANAREDE [2] is given in Table 5.

Table 3: Generator Step- Up Transformer Data (on Transformer MVA Base)

From Bus	To Bus	R (%)	X (%)	MVA Base	tap (pu)
1	5	0	15	900	1
2	6	0	15	900	1
3	11	0	15	900	1
4	10	0	15	900	1

Table 4: Load and Capacitor Bank Data

Bus	P (MW)	Q (MVAr)	Qshunt (MVAr)
7	967	100	200
9	1767	100	350

Table 5: ANAREDE Power Flow Results

Bus	Type	Base (kV)	Name	Voltage (p.u.)	Angle (graus)	Active Generation (MW)	Reactive Generation (Mvar)
1	1- PV	20.0	G1	1.030	20.1	700.	185.
2	1- PV	20.0	G2	1.010	10.3	700.	234.6
3	2 - Slack	20.0	G3	1.030	-7.	719.1	176.0
4	1- PV	20.0	G4	1.010	-17.	700.	202.0
5	0 - PQ	230.0	-	1.006	13.6	-	-
6	0 - PQ	230.0	-	0.978	3.52	-	-
7	0 - PQ	230.0	-	0.961	-4.9	-	-
8	0 - PQ	230.0	-	0.949	-19.	-	-
9	0 - PQ	230.0	-	0.971	-32.	-	-
10	0 - PQ	230.0	-	0.983	-24.	-	-
11	0 - PQ	230.0	-	1.008	-14.	-	-

To use the ANAREDE software [2] for this system, the input file denominated "*2_areas.pwf*" was produced according the data setup presented in this section. This input file is presented in Appendix A and also available for download at the website.

2. Dynamic Simulation Models

The models used in this report and the respective parameters for dynamic simulations are described in this Section. All generation units are considered identical and represented by the same dynamic models and parameters, with exception of the inertia constants.

In the dynamic analysis, both eigenvalue/eigenvector calculations and nonlinear simulations are performed, respectively, using PACDYN [4] and ANATEM [3]. For this reason, similar models may have different identifier tags in the two software. Whenever necessary, this issue will be mentioned and the different models presented.

2.1 Synchronous Machines

The generator units are represented by the same 6th order dynamic model for cylindrical or round rotor with the saturation function represented as an exponential function. The parameters of the synchronous machines, in per unit at rated MVA base, are presented in Table 6.

Table 6: Parameters Synchronous Machines

PARAMETERS		Value	Unit
Description	**Symbol**		
Rated apparent power	-	900	MVA
d-axis open circuit transient time constant	T'_{do}	8.0	s
d-axis open circuit sub-transient time constant	T''_{do}	0.03	s
q-axis open circuit transient time constant	T'_{qo}	0.4	s
q-axis open circuit sub-transient time constant	T''_{qo}	0.05	s
Inertia	H	[1]	MW.s/MVA
Speed damping	D	0	pu
d-axis synchronous reactance	X_d	1.8	pu
q-axis synchronous reactance	X_q	1.70	pu
d-axis transient reactance	X'_d	0.3	pu
q-axis transient reactance	X'_q	0.55	pu
sub-transient reactance	$X''_d = X''_q$	0.25	pu
Leakage reactance	X_ℓ	0.20	pu
Saturation parameter A	A	0.015	–
Saturation parameter B	B	9.6	–
Saturation parameter C	C	0.9	-

Notes:

[1] Units 1 and 2 have inertias H = 6.50, while for units 3 and 4 the inertias are H = 6.175

For both nonlinear and linear analysis (ANATEM and PACDYN software, respectively) the model "*MD03*" was employed. Figures 2, 3 and 4 [3] present the block diagrams of the swing equation, the direct axis and quadrature axis equations, respectively.

The representation of the machine data at the input file of both software (file *"maq.BLT"*) is presented in Figure 5.

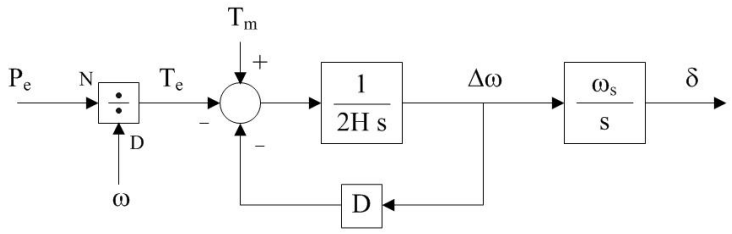

Figure 2: Block Diagram of Swing Equation

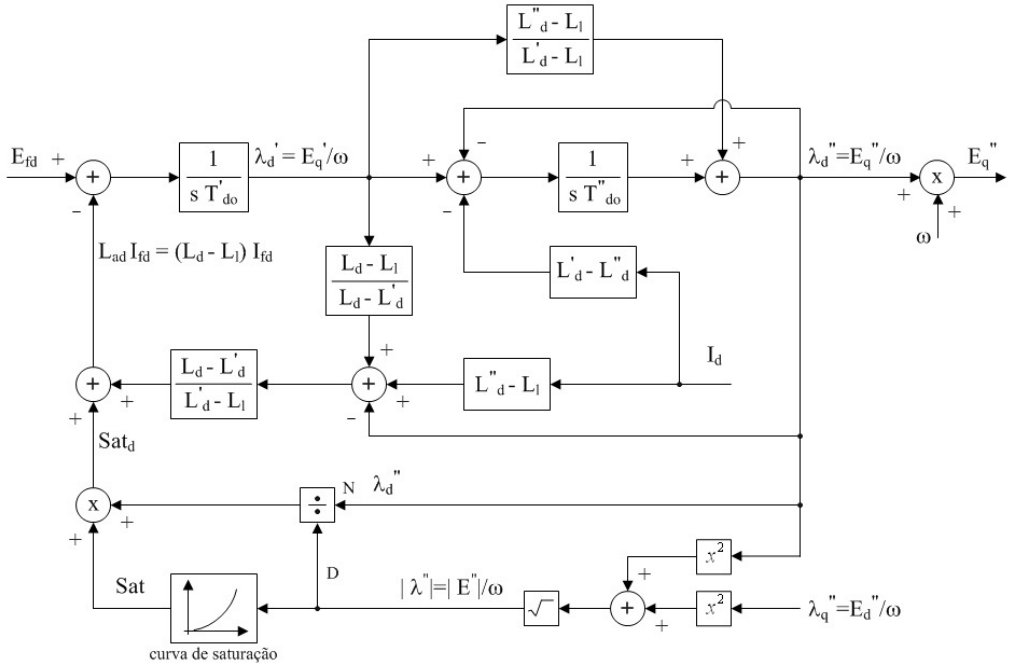

Figure 3: Block Diagram of Direct Axis Equations

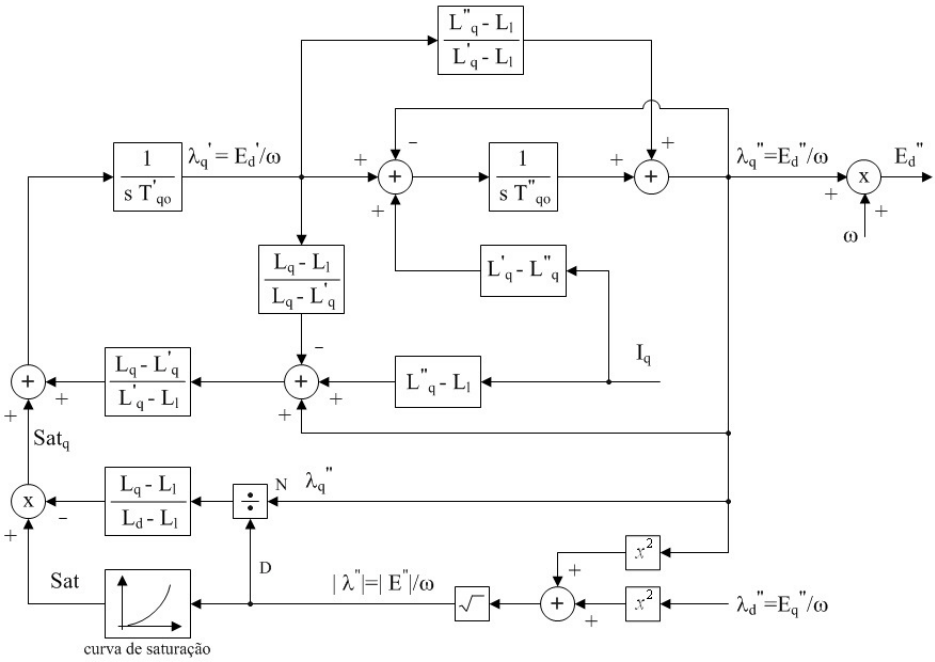

Figure 4: Block Diagram of Quadrature Axis Equations

```
DMDG MD03
( Gerador 01
(No)    (CS)  (Xd )(Xq )(X'd)(X'q)(X"d)(Xl )(T'd)(T'q)(T"d)(T"q)
0001    0001 180.0170.0 30.0 55.0 25.0 20.0  8.0  0.4 0.03 0.05
(No)    (Ra )( H )( D )(MVA)Fr C
0001    .00256.5       900.060 N
(
( Gerador 02
(No)    (CS)  (Xd )(Xq )(X'd)(X'q)(X"d)(Xl )(T'd)(T'q)(T"d)(T"q)
0002    0001 180.0170.0 30.0 55.0 25.0 20.0  8.0  0.4 0.03 0.05
(No)    (Ra )( H )( D )(MVA)Fr C
0002    .00256.5       900.060 N
( Gerador 03
(No)    (CS)  (Xd )(Xq )(X'd)(X'q)(X"d)(Xl )(T'd)(T'q)(T"d)(T"q)
0003    0001 180.0170.0 30.0 55.0 25.0 20.0  8.0  0.4 0.03 0.05
(No)    (Ra )( H )( D )(MVA)Fr C
0003    .00256.175     900.060 N
( Gerador 04
(No)    (CS)  (Xd )(Xq )(X'd)(X'q)(X"d)(Xl )(T'd)(T'q)(T"d)(T"q)
0004    0001 180.0170.0 30.0 55.0 25.0 20.0  8.0  0.4 0.03 0.05
(No)    (Ra )( H )( D )(MVA)Fr C
0004    .00256.175     666.760 N
(
999999
(
(==============================================================================
( DADOS DE CURVAS DE SATURACAO DAS MAQUINAS
(==============================================================================
(
DCST
(Tipo exponencial KUNDUR@114
(No)    T (  Y1  ) (  Y2  ) (  X1  )
0001    2  0.015    9.6      0.9
(
999999
```

Figure 5: Representation of Synchronous Machines to use at ANATEM and PACDYN Software

2.2 Excitation Systems

Following the approach employed in [1], this report presents simulation results with different representations/models for the excitation systems of the generators. The excitation systems used in this report are compliant with the IEEE Std. 421.5(2005) [5] and are the DC Rotating Excitation System DC1A and the Static Excitation System ST1A.

2.2.1 DC Rotating Excitation System – DC1A

The block diagram of the DC1A excitation system [5], considering the dynamics of the voltage transducer, is shown in Figure 6. The parameters for the model are presented in Table 7.

The files associated with this type of excitation system are: *"reg_DC1A_Ka_20.CDU"* to $K_A = 20$ and *"reg_DC1A_Ka_200.CDU"* to $K_A = 200$.

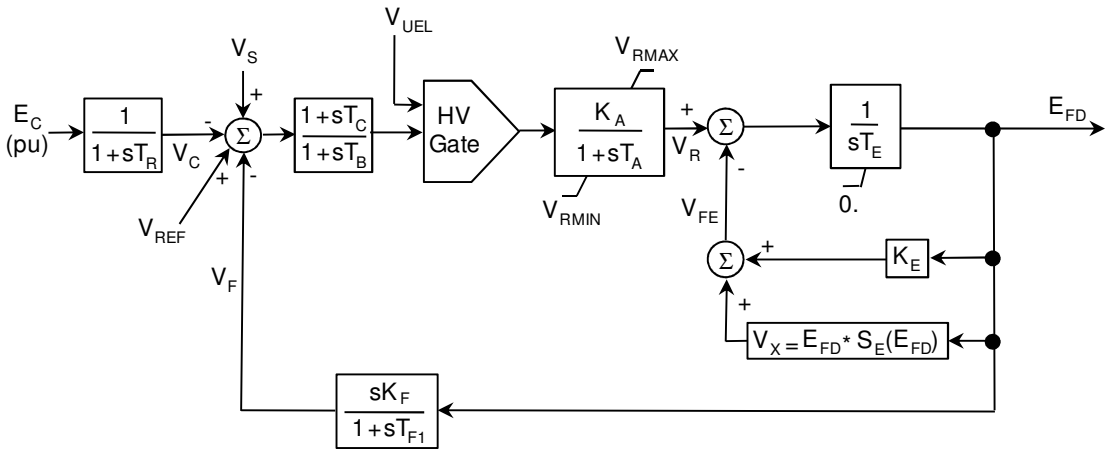

Figure 6: Block Diagram for DC1A [5] considering the dynamics of the voltage transducer

Table 7: Dynamic Model Data for DC1A considering the dynamic of the voltage transducer

PARAMETERS		Value	Unit
Description	**Symbol**		
Voltage transducer time constant	T_R	0.05	s
AVR steady state gain	K_A[1]	20	pu
AVR equivalent time constant	T_A	0.055	s
TGR block 1 denominator time constant	T_B	0	s
TGR block 2 numerator time constant	T_C	0	s
Max. AVR output	V_{Rmax}	5	pu
Min. AVR output	V_{Rmin}	–3	pu
Exciter feedback time constant	K_E[2]	1	pu
Exciter time constant	T_E	0.36	s
Stabilizer feedback gain	K_F	0.125	pu
Stabilizer feedback time constant	T_{FI}	1.8	s
Exciter saturation coefficient A	A_{EX}[3]	0.0056	pu
Exciter saturation coefficient B	B_{EX}[3]	1.075	–

Notes:

[1] Results are presented for $K_A = 20$ and also for $K_A = 200$

[2] K_E was considered constant

[3] Exciter saturation was considered as $SE(E_{FD}) = A_{EX}e^{(B_{EX}E_{FD})}$

To illustrate how the DC1A structure was inserted into the input files for PacDyn and ANATEM software, the part of the input file related to this excitation system is presented in Figure 7.

```
011  (*********************************************************************
012  (ncdu) ( nome cdu )
013    101    SELF_DC
014  (---------------------------------------------------------------------
015  (EFPAR (npar) (      valpar      )
016  (---------------------------------------------------------------------
017  DEFPAR #Tr     0.05
018  (DEFPAR #Tc     0.0
019  (DEFPAR #Tb     0.0
020  DEFPAR #Ka     20.0
021  DEFPAR #Ta     0.055
022  DEFPAR #Te     0.36
023  DEFPAR #Ke     1.0
024  DEFPAR #Aex    0.0056
025  DEFPAR #Bex    1.075
026  DEFPAR #Kf     0.125
027  DEFPAR #Tf     1.8
028  (---------------------------------------------------------------------
029  (nb) (tipo) (stip)s(vent) (vsai) ( p1 )( p2 )( p3 )( p4 ) (vmin) (vmax)
030  (---------------------------------------------------------------------
031  0001 ENTRAD                VREF
032  0002 IMPORT VTR            ET
033  0003 LEDLAG         ET     VC     1.0         1.0    #Tr
034  0004 SOMA          +VREF   X1
035                     -VC     X1
036  0005 SOMA          +X1     X2
037                     -VF     X2
038  (0006 LEDLAG        X2     X3     1.0    #Tc   1.0    #Tb
039  0007 LEDLAG         X2     VR     #Ka         1.0    #Ta
040  0008 SOMA          +VR     X4
041                     -VFE    X4
042  0009 PROINT         X4     X5     1.0         #Te
043  0010 GANHO          X5     X6     #Ke
044  0011 FUNCAO EXP     X6     X7     #Aex   #Bex
045  0012 MULTPL         X7     VX
046                      X5     VX
047  0013 SOMA          +X6     VFE
048                     +VX     VFE
049  0014 WSHOUT         X5     VF     #Kf    1.0    #Tf
050  0015 EXPORT EFD     X5
051  (---------------------------------------------------------------------
052  FIMCDU
```

Figure 7: Representation of DC1A to use with ANATEM and PACDYN software

2.2.2 Static Excitation System ST1A

The block diagram of the ST1A excitation system [5] is shown in Figure 8. The transient gain reduction is implemented by the lead-lag block with parameters T_C and T_B, so the parameters T_{C1}, T_{B1}, K_F and T_F are not applicable and have been set accordingly. Similarly, the generator field current limiter represented by the parameters K_{LR} and I_{LR} is not considered in the results presented in this report. The parameters for the ST1A model are presented in Table 8.

The limits (parameters V_{Imax}, V_{Imin}, V_{Amax}, V_{Amin}, V_{Rmax} and V_{Rmin}) of the model were set to typical values corresponding to the expected ceilings of such a static excitation system. These limits are irrelevant for the small-signal analysis of the system dynamic response. On the other hand, these limits are a critical part of the model and can play a crucial role in the expected response of the excitation system following large system disturbances such as permanent faults, for example.

This excitation system is evaluated with respect to two aspects: at first considering the transient gain reduction (TGR), corresponding to file *"reg_ST1A_with_TGR.CDU"*, and in the sequence not considering the (TGR), corresponding to file *"reg_ST1A_without_TGR.CDU"*.

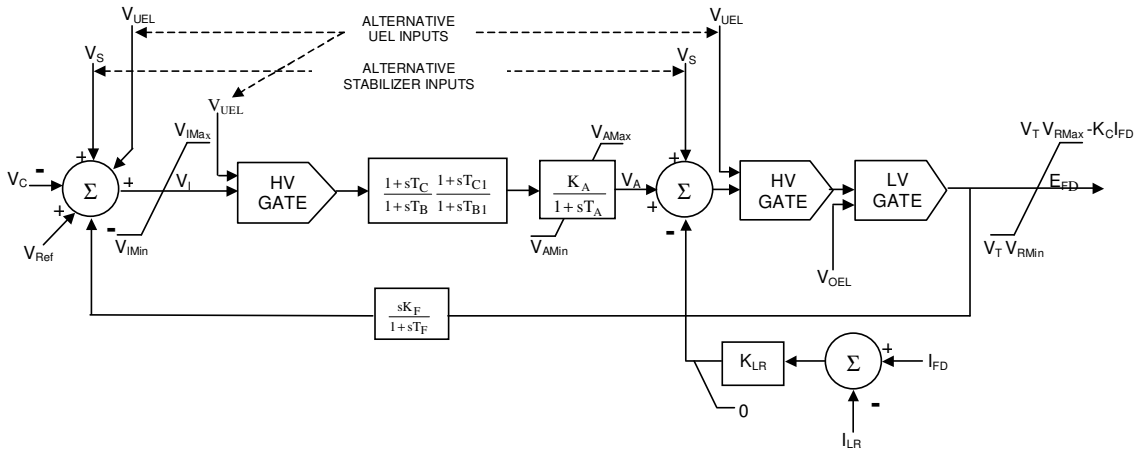

Figure 8: Block Diagram for the ST1A excitation system [5]

Table 8: Dynamic Model Data for ST1A

PARAMETERS		Value	Unit
Description	**Symbol**		
Voltage transducer time constant	T_R	0.01	s
Max. voltage error	V_{Imax}	99	pu
Min. voltage error	V_{Imin}	–99	pu
TGR block 1 numerator time constant	T_C	1	s
TGR block 1 denominator time constant	T_B	10	s
TGR block 2 numerator time constant	T_{C1}	0	s
TGR block 1 denominator time constant	T_{B1}	0	s
AVR steady state gain	K_A	200	pu
Rectifier bridge equivalent time constant	T_A	0	s
Max. AVR output	V_{Amax}	4	pu
Min. AVR output	V_{Amin}	–4	pu
Max. rectifier bridge output	V_{Rmax}	4	pu
Min. rectifier bridge output	V_{Rmin}	–4	pu
Commutation factor for rectifier bridge	K_C	0	pu
Stabilizer feedback gain	K_F	0	pu
Stabilizer feedback time constant	T_F	1	s
Field current limiter gain	K_{LR}	0	pu
Field current instantaneous limit	I_{LR}	3	pu

To illustrate how the ST1A structure was inserted into the input files for PACDYN and ANATEM software, the part of the input file related to this excitation system is presented in Figure 9.

```
(*********************************************************************
(ncdu) ( nome cdu )
  101    THY_TGR
(-------------------------------------------------------------------
(EFPAR (npar) (      valpar      )
(-------------------------------------------------------------------
DEFPAR #Tr     0.05
DEFPAR #Ka     200.0
DEFPAR #Ta     1.0
DEFPAR #Tb     10.0
(-------------------------------------------------------------------
(nb) (tipo) (stip)s(vent) (vsai) ( p1 )( p2 )( p3 )( p4 ) (vmin) (vmax)
(-------------------------------------------------------------------
0001 ENTRAD                VREF
0002 IMPORT VTR            ET
0003 LEDLAG         ET     VC      1.0          1.0    #Tr
0004 SOMA          +VREF   X1
                   -VC     X1
0005 GANHO          X1     X2      #Ka
0006 LEDLAG         X2     X3      1.0    #Ta   1.0    #Tb
0007 EXPORT EFD     X3
(-------------------------------------------------------------------
FIMCDU
```

Figure 9: Representation of ST1A at ANATEM and PACDYN software

2.3 Power System Stabilizers

The block diagram of the PSS1A model [5] is shown in Figure 10. The parameters for this model are presented in Table 9 [1].

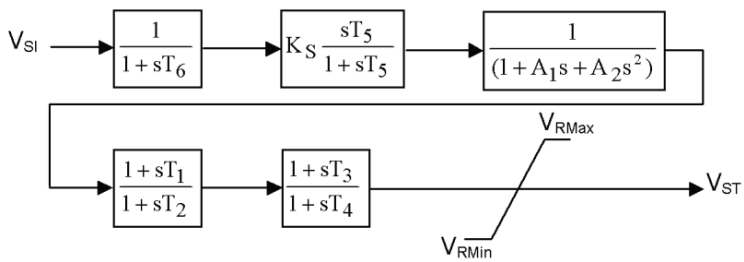

Figure 10: Block Diagram for PSS1A [5]

Table 9: Dynamic Model Data for PSS1A

PARAMETERS		Value	Unit
Description	Symbol		
2nd order denominator coefficient	A_1	0	
2nd order denominator coefficient	A_2	0	
1st lead-lag numerator time constant	T_1	0.08	s
1st lead-lag denominator time constant	T_2	0.015	s
2nd lead-lag numerator time constant	T_3	0.08	s
2nd lead-lag denominator time constant	T_4	0.015	s
Washout block time constant	T_5	10	s
Transducer time constant	T_6	0	s
PSS gain	K_S	10	pu
PSS max. output	V_{Rmax}	0.05	pu
PSS min. output	V_{Rmin}	–0.05	pu

To illustrate how the PSS1A structure was inserted into the input files for PacDyn and ANATEM, the part of the input file related to this controller is presented in Figure 11.

```
143  (*********************************************************************
144  (ncdu) ( nome cdu )
145    201   PSS
146  (---------------------------------------------------------------------
147  (EFPAR (npar) (     valpar     )
148  (---------------------------------------------------------------------
149  DEFPAR #Kstab 10.0
150  DEFPAR #Tw    10.0
151  DEFPAR #T1        0.08
152  DEFPAR #T2        0.015
153  DEFPAR #T3        0.08
154  DEFPAR #T4        0.015
155  DEFPAR #PSSax     0.05
156  DEFPAR #PSSin    -0.05
157  (---------------------------------------------------------------------
158  (nb) (tipo) (stip)s(vent) (vsai) ( p1 )( p2 )( p3 )( p4 ) (vmin) (vmax)
159  (---------------------------------------------------------------------
160  0001 IMPORT DWMAQ         X1
161  0002 GANHO         X1     X2     #Kstab
162  0003 WSHOUT        X2     X3     #Tw   1.0   #Tw
163  0004 LEDLAG        X3     X4     1.0   #T1   1.0   #T2
164  0005 LEDLAG        X4     X5     1.0   #T3   1.0   #T4
165  0006 LIMITA        X5     X6                            PSSin  PSSax
166  0007 EXPORT VSAD   X6
167  (---------------------------------------------------------------------
168  (DEFVA        (Vdef) ( D1 )
169  (---------------------------------------------------------------------
170  DEFVAL        PSSin  #PSSin
171  DEFVAL        PSSax  #PSSax
172  FIMCDU
```

Figure 11: Representation of PSS1A at ANATEM software

3. Simulation Results

The simulation results are presented in two subsections: small signal stability analysis and nonlinear simulations, respectively. The results presented in both subsections are organized in terms of the following six cases, related to the type of excitation system:

Case 1: All generators in manual control (constant generator field voltage);

Case 2: DC1A with Ka = 20 (Section 2.2.1);

Case 3: DC1A with Ka = 200 (Section 2.2.1);

Case 4: ST1A with TGR (Section 2.2.2);

Case 5: ST1A without TGR (Section 2.2.2);

Case 6: ST1A without TGR (Section 2.2.2) and with PSS1A (Section 2.3);

3.1 Small Signal Stability Analysis

The PACDYN software [4] was used in this analysis and the names of input files necessary to perform the simulations, in each case, are presented in the Table 10 (these files are available for download at the website).

Table 10: Name of Input Files for the PacDyn Software

Case	PacDyn Activity Center Database (*.pac)
Case 1	*Case_1_no_AVR.pac*
Case 2	*Case_2_DC1A_Ka_20.pac*
Case 3	*Case_3_DC1A_Ka_200.pac*
Case 4	*Case_4-ST1A_with_TGR.pac*
Case 5	*Case_5_ST1A_without_TGR.pac*
Case 6	*Case_6_ST1A_with_PSS.pac*

To perform the simulation with PACDYN it is necessary to utilize the *"PACDYN Activity Center Database *.pac"* file related to the corresponding case. This file associates the machine dynamic model file (*"maq.BLT"*) with the respective controls (*"*.CDU"* files) and with the steady state of the system (file *2_areas.pwf* – Section 1). The results obtained with the small signal stability analysis, in terms of the electromechanical modes, are presented in the Table 11.

Table 11: Electromechanical Modes Calculated by PacDyn

Case	Inter-area Mode		Area 1 Local Mode		Area 2 Local Mode	
	Freq. [Hz]	Damp [%]	Freq. [Hz]	Damp [%]	Freq. [Hz]	Damp [%]
Case 1	0.5432	3.4984	1.0732	8.5794	1.1038	8.4806
Case 2	0.5326	1.4850	1.0717	8.3982	1.1021	8.3230
Case 3	0.5392	-1.3296	1.0748	8.0516	1.1050	7.9592
Case 4	0.5501	-3.2235	1.0789	7.9593	1.1093	7.8483
Case 5	0.6086	-0.5758	1.1263	8.9956	1.1581	8.7590
Case 6	0.5799	12.058	1.0822	31.255	1.1095	32.052

3.2 Numerical Integration of the Nonlinear Model

In this analysis, the ANATEM software [3] was employed. In order to stimulate the electromechanical modes of the system, the same disturbance was applied to each of the cases previously defined.

The main objective associated with the selection of this disturbance was to assess the system damping and the effectiveness of the proposed stabilizers in providing damping to these oscillations.

The disturbance applied correspond to simultaneous changes in the voltage references of all generator excitation systems, applied at t=1.0 second. The applied step changes are as follows:

GENERATOR	STEP IN V_{ref}
G1	+3%
G2	–1%
G3	–3%
G4	+1%

These changes in voltage reference were selected in order to excite not only the inter-area oscillation mode but also the other electromechanical modes in the system.

To run the nonlinear simulations, the set of files presented in Table 12 were used. To perform the simulation with ANATEM, it is necessary to utilize the "*Base File*" related to each case. This file associates the respective "*Control Defined by User*" file with the steady state of the system (file *2_areas.pwf* – Section 1).

For Case 1 such a file will not be available, because there are no excitation systems associated with the machines. Thus, the disturbance could not be simulated.

Table 12: Name of Input Files at ANAREDE Software

Case	Control Defined by User (*.cdu)	Base File (*.stb)
Case 2	*reg_DC1A_Ka_20.cdu*	*Case_2_DC1A_Ka_20_Vref.stb*
Case 3	*reg_DC1A_Ka_200.cdu*	*Case_3_DC1A_Ka_200_Vref.stb*
Case 4	*reg_ST1A_with_TGR.cdu*	*Case_4_ST1A_with_TGR_Vref.stb*
Case 5	*reg_ST1A_without_TGR.cdu*	*Case_5_ST1A_without_TGR_Vref.stb*
Case 6	*reg_ST1A_without_TGR_with_PSS_mod. cdu*	*Case_6_ST1A_without_TGR_with_PSS_ Vref_mod.stb*

The results obtained by numerical integration of the nonlinear model are presented in the following, in terms of absolute variation of rotor angular speed in [p.u.] (denoted as "FREQ" in the plots), active power in [MW] (denoted as "PELE" in the plots) and terminal voltages of the machines in [p.u.] (denoted as "VOLT" in the plots).

3.2.1 Case 2 – DC1A with K_A=20

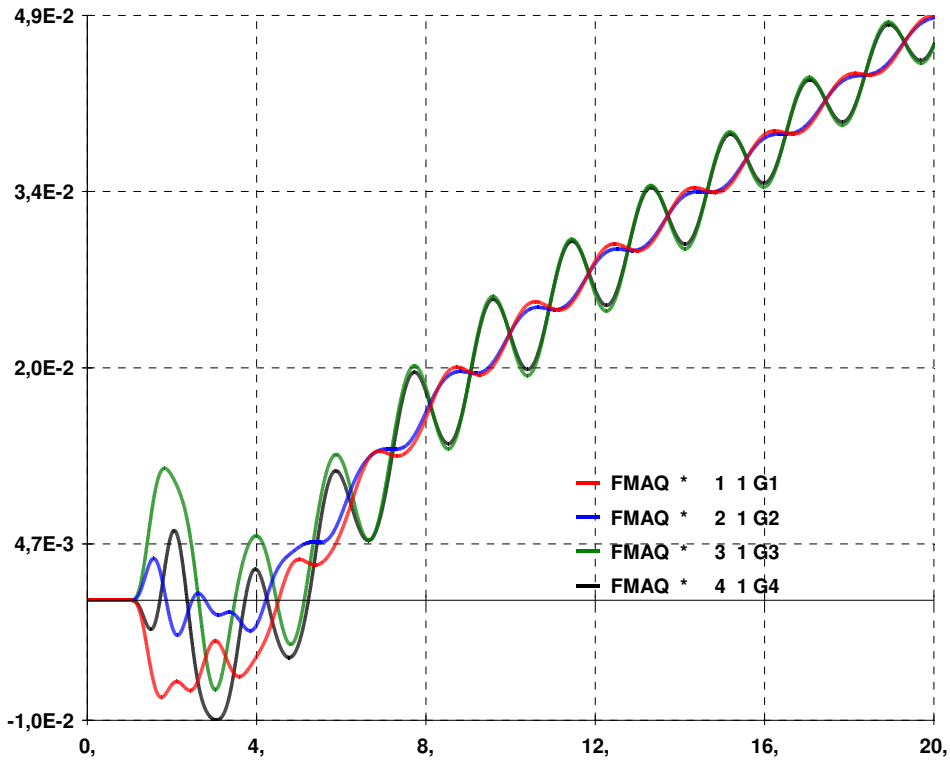

Figure 12: Case 2 – Rotor speeds of all machines

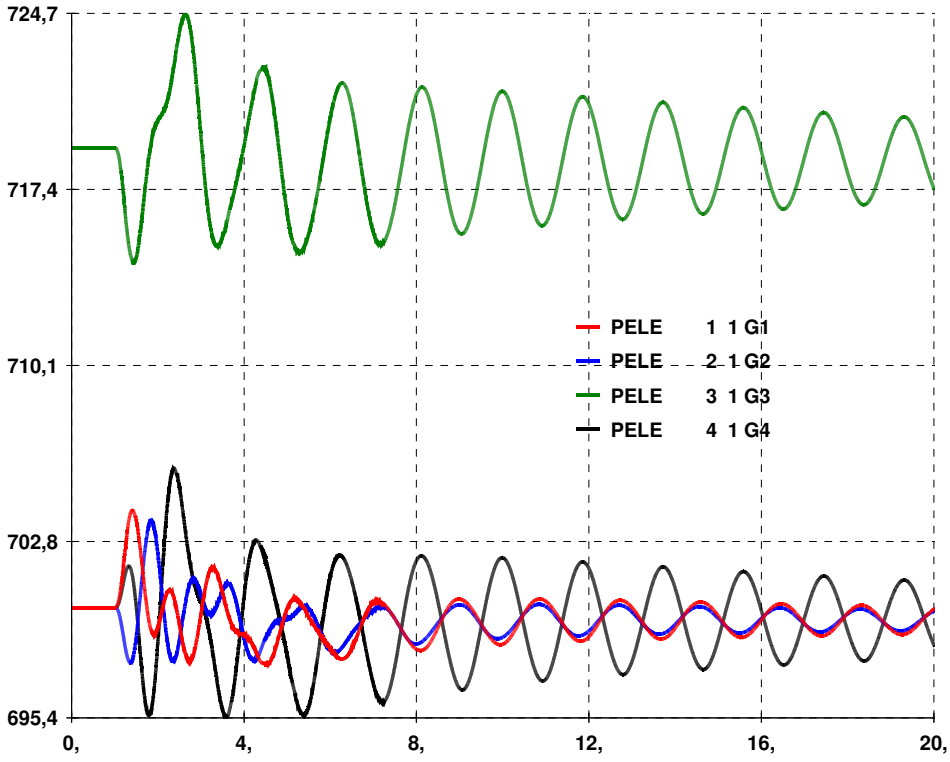

Figure 13: Case 2 – Active powers of all machines

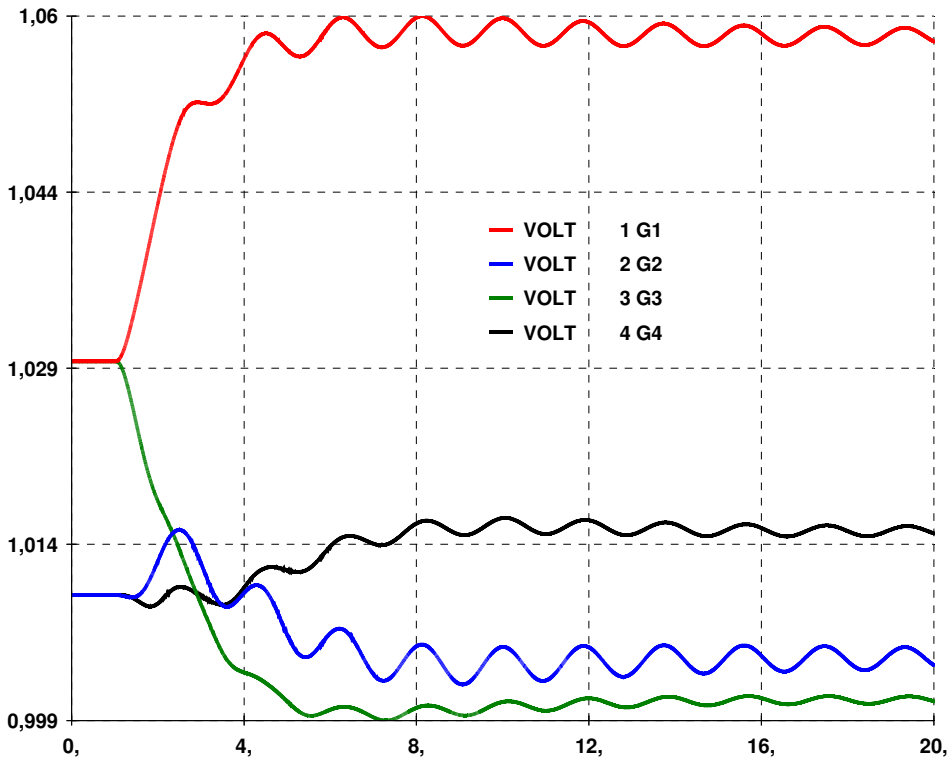

Figure 14: Case 2 – Terminal voltages of all machines

3.2.2 Case 3 – ESDC1A with K_A=200

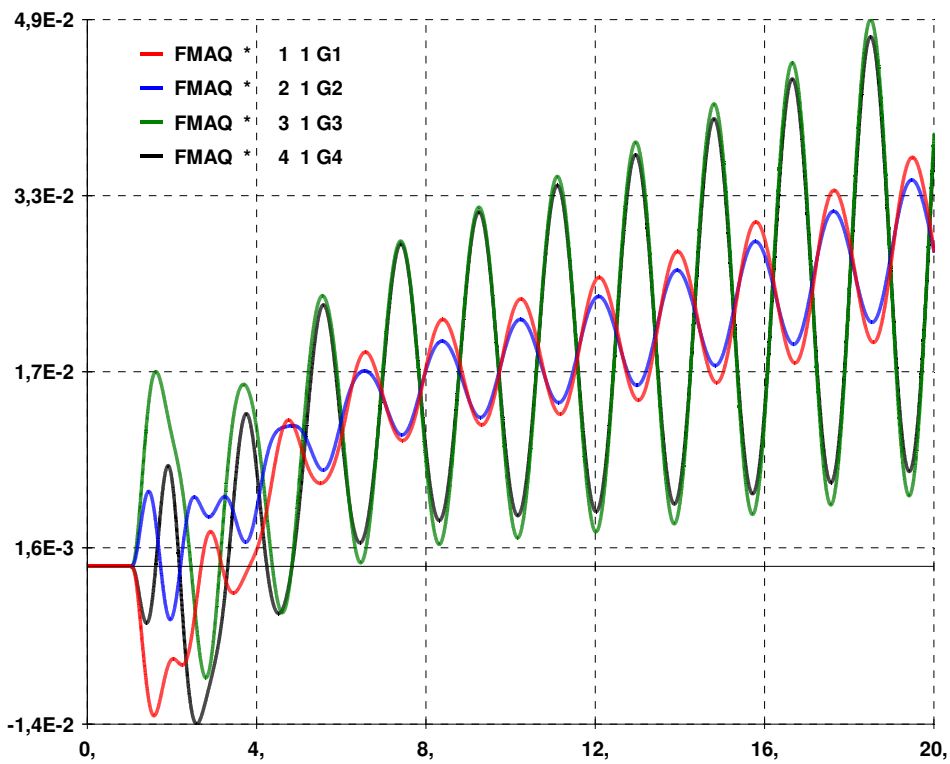

Figure 15: Case 3 – Rotor speeds of all machines

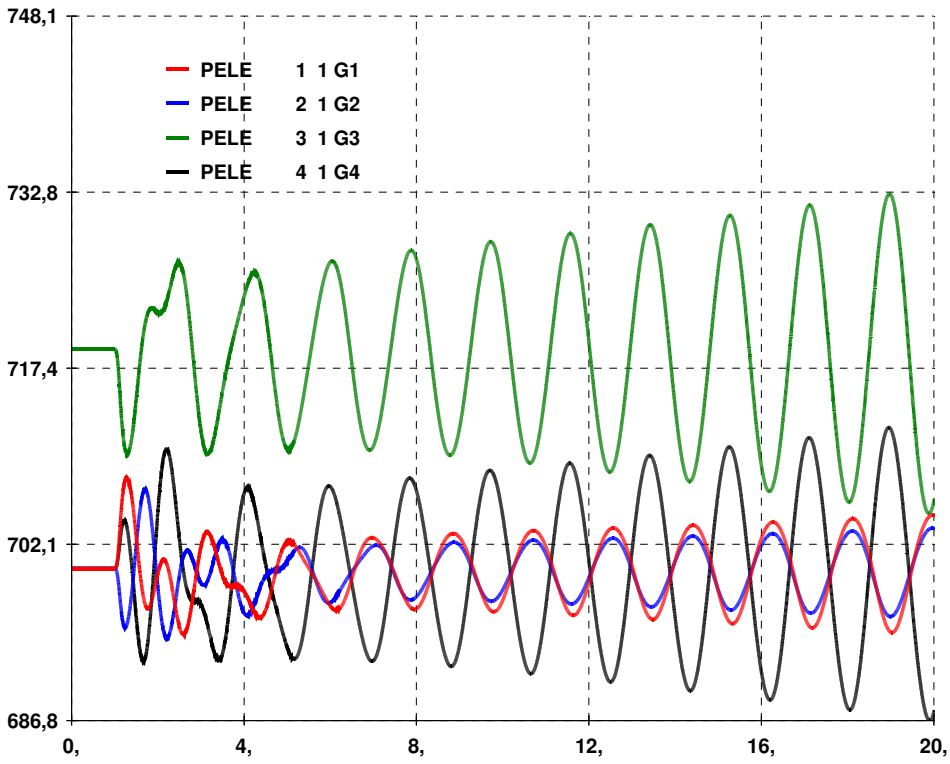

Figure 16: Case 3 – Active powers of all machines

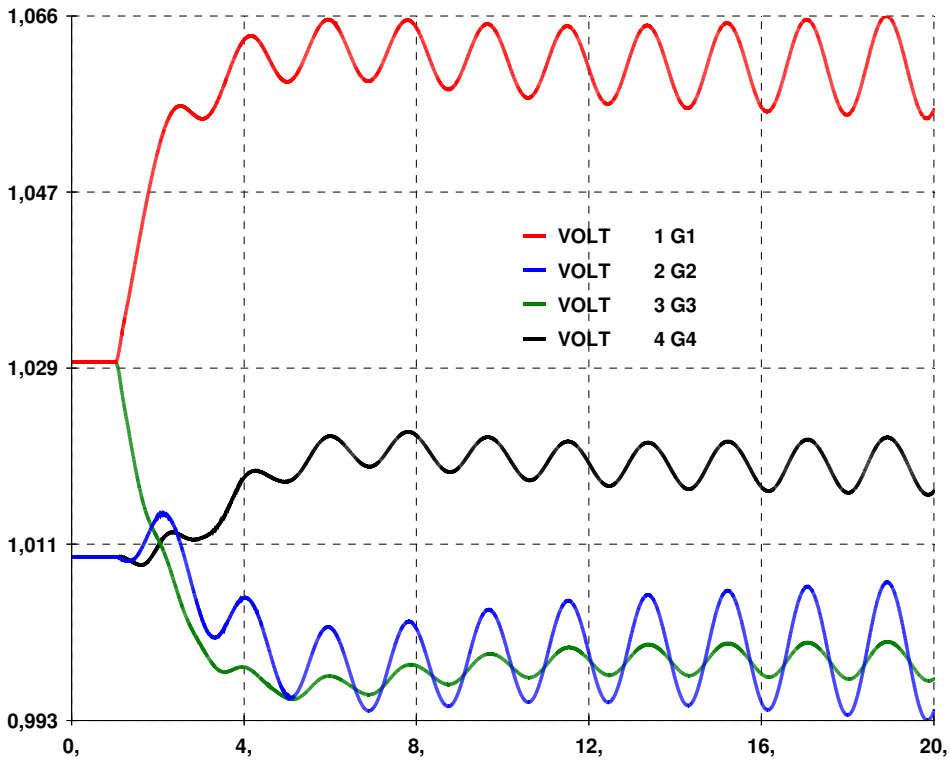

Figure 17: Case 3 – Terminal voltages of all machines

3.2.3 Case 4 – ESST1A with TGR

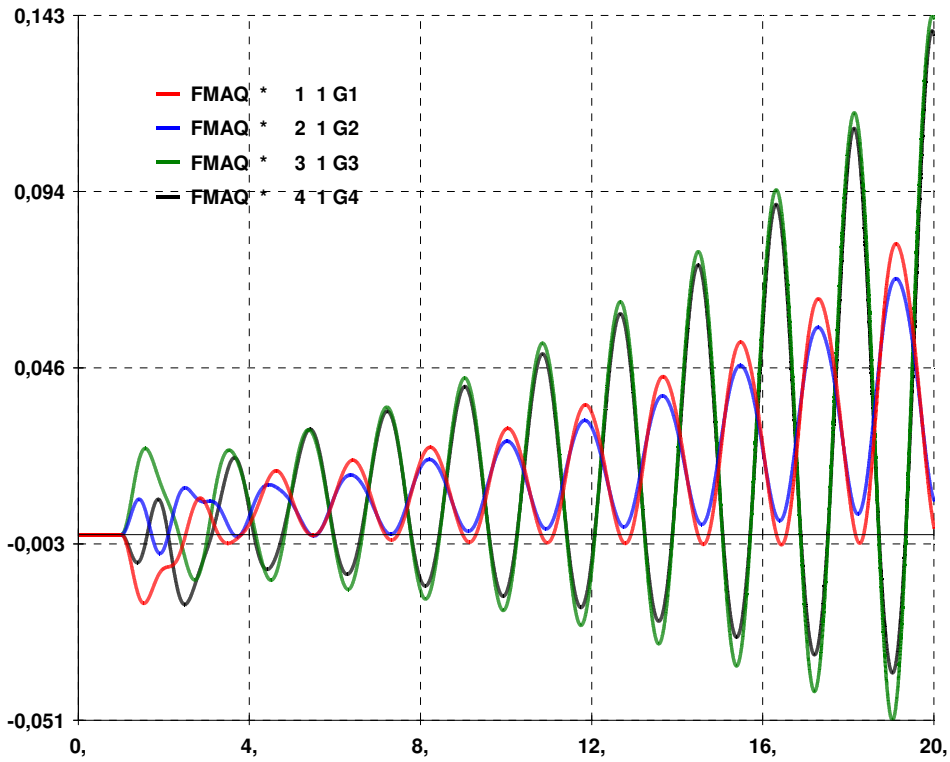

Figure 18: Case 4 – Rotor speeds of all machines

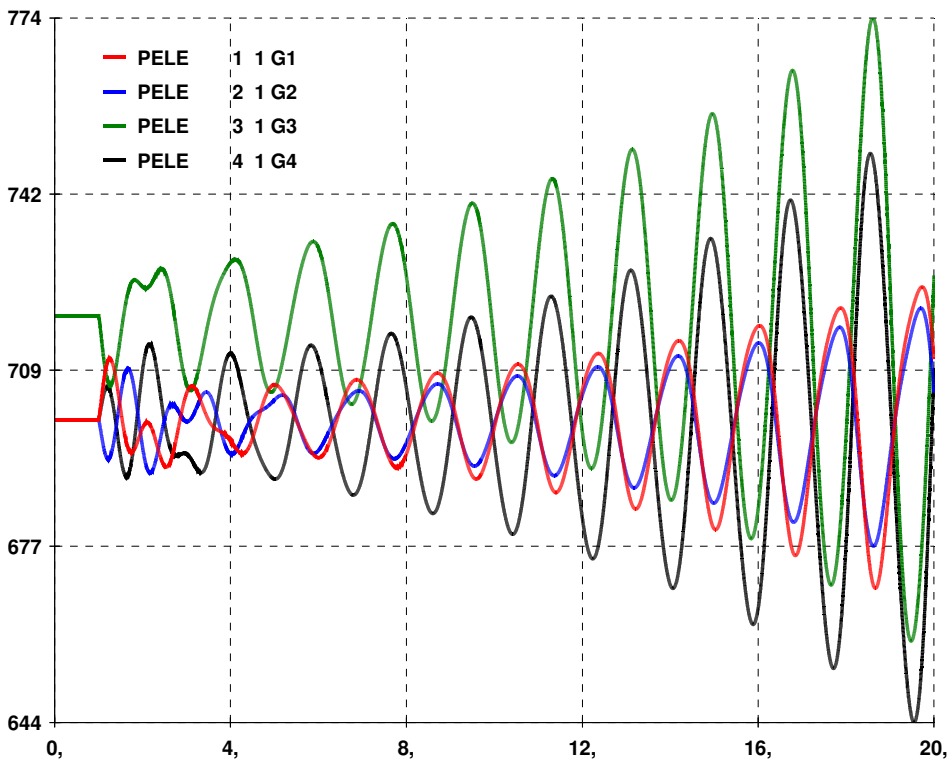

Figure 19: Case 4 – Active powers of all machines

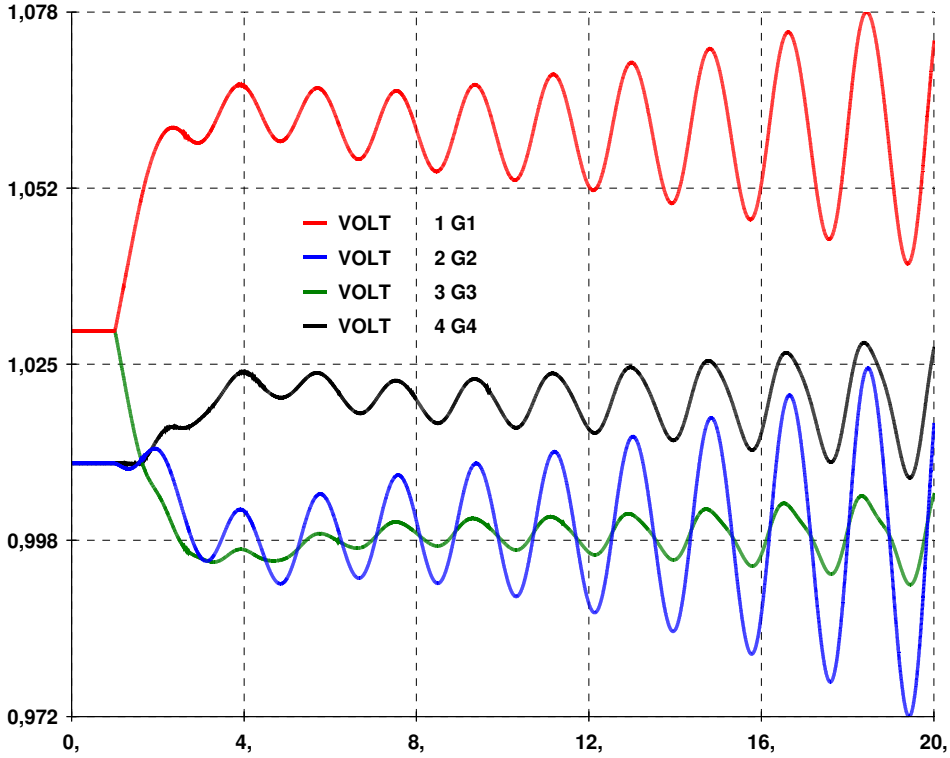

Figure 20: Case 4 – Terminal voltages of all machines

3.2.4 Case 5 – ESST1A without TGR

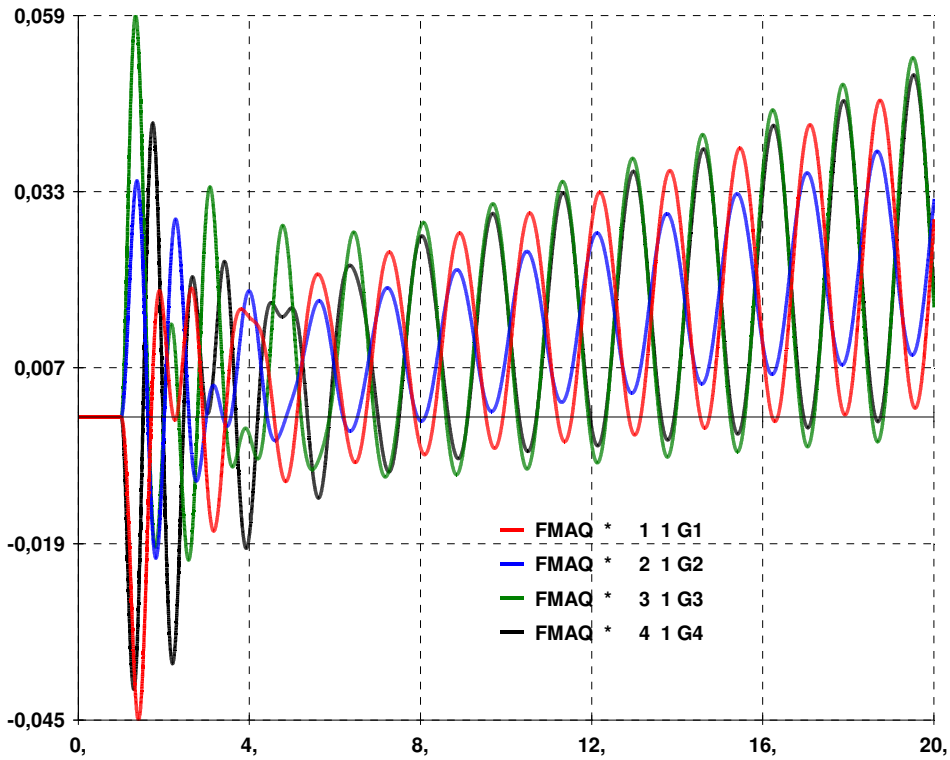

Figure 21: Case 5 – Rotor speeds of all machines

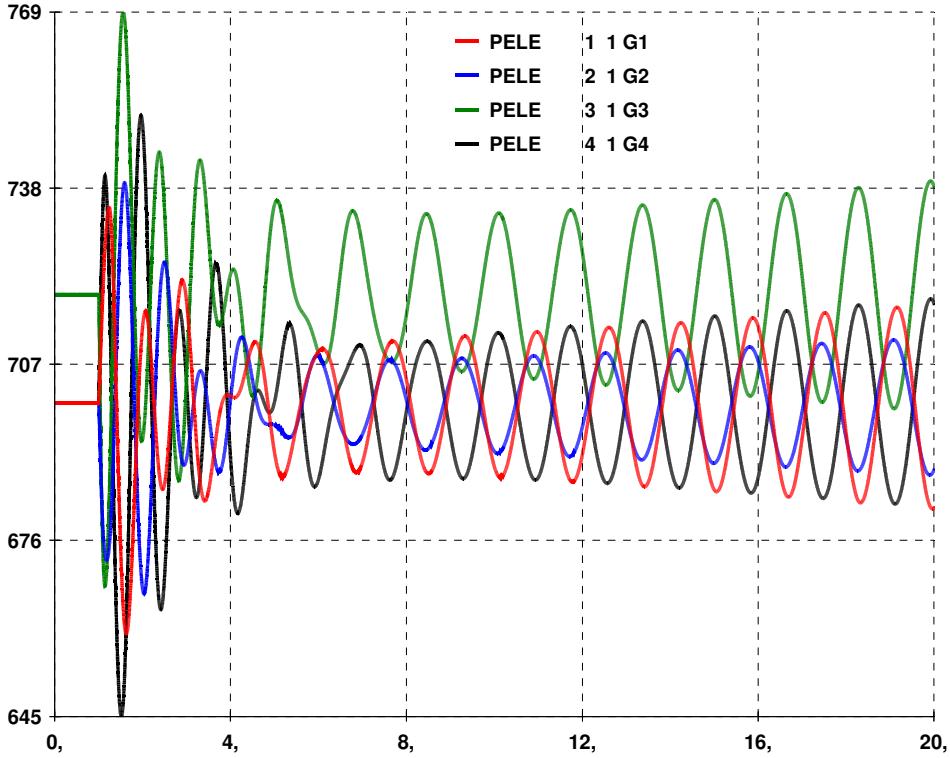

Figure 22: Case 5 – Active powers of all machines

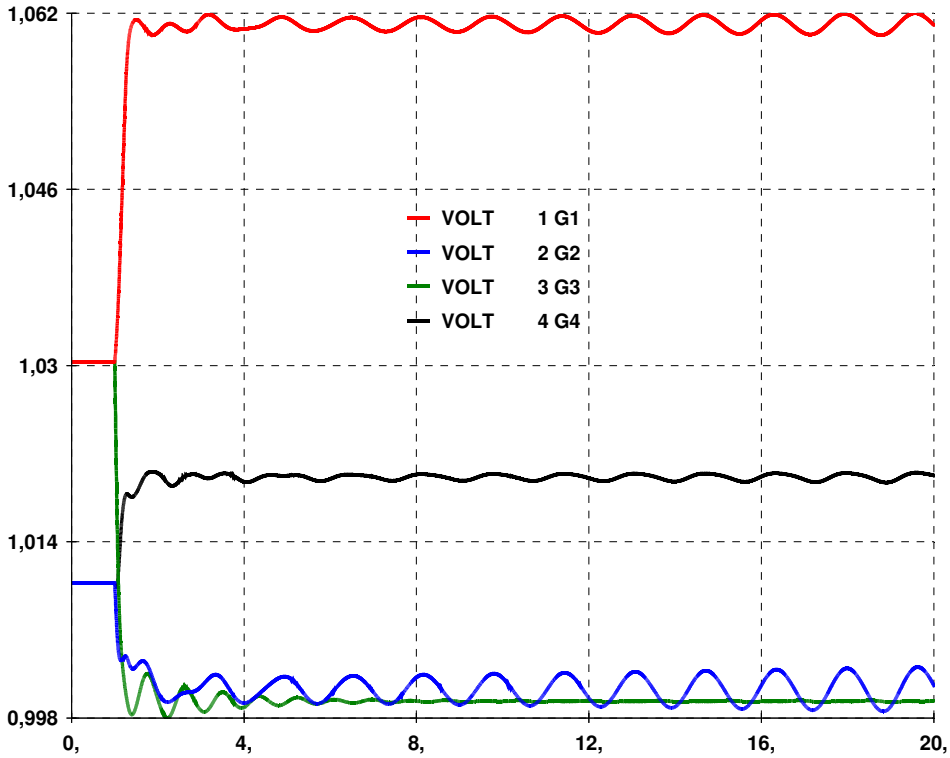

Figure 23: Case 5 – Terminal voltages of all machines

3.2.5 Case 6 – ESST1A without TGR with PSS

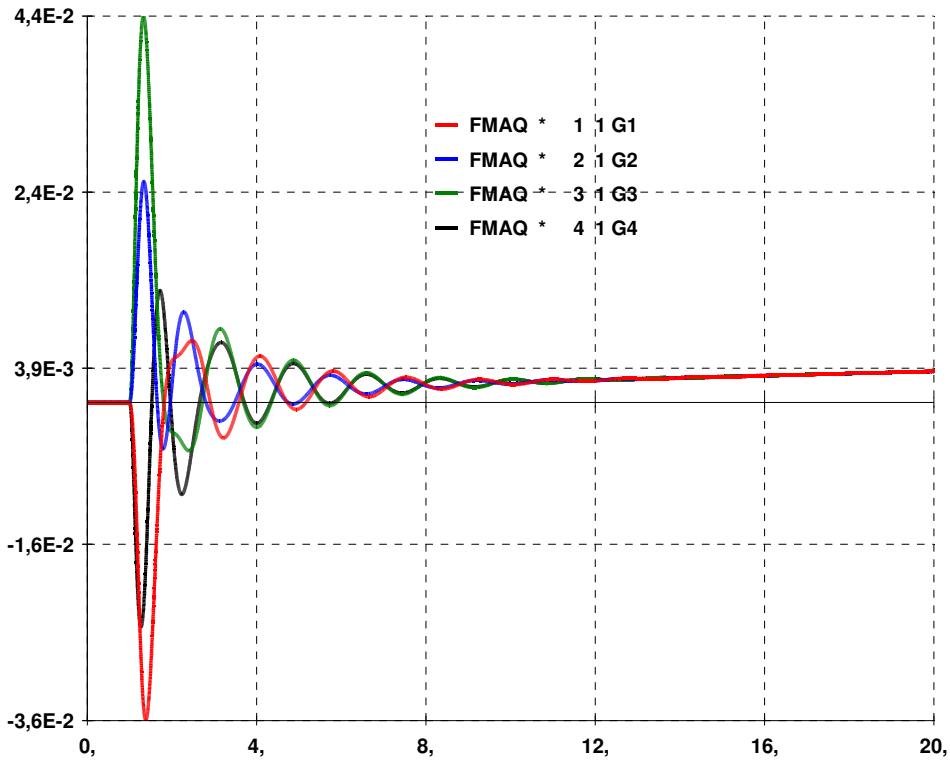

Figure 24: Case 6 – Rotor speeds of all machines

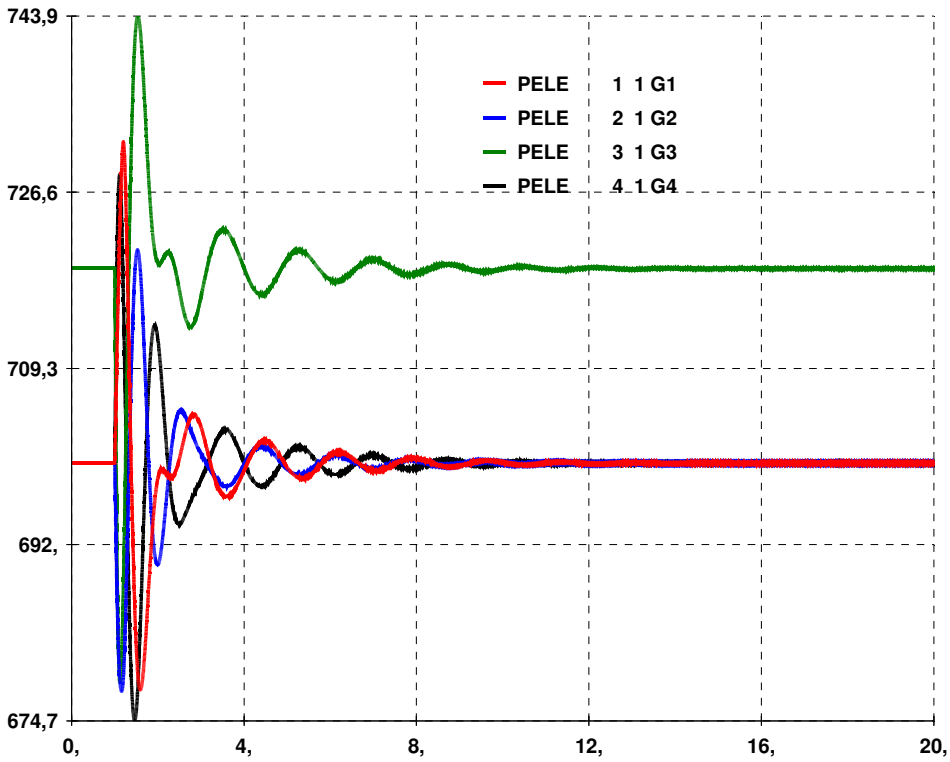

Figure 25: Case 6 – Active powers of all machines

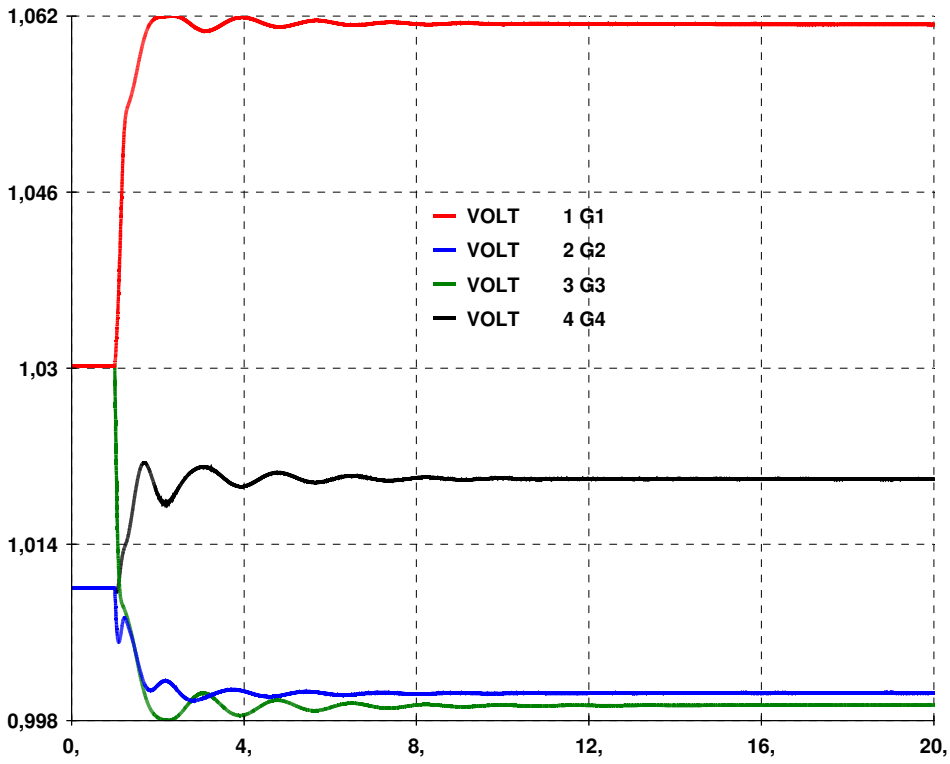

Figure 26: Case 6 – Terminal voltages of all machines

4. References

[1] P. Kundur, *Power System Stability and Control*, McGraw Hill, 1994.

[2] DRE - Departamento de Redes Elétricas, *Manual do Usuário: Programa de Análise de Redes V09.07*.05, CEPEL, 2011.

[3] DRE - Departamento de Redes Elétricas, *Manual do Usuário: Análise de Transitórios Eletromecânicos V10.04.06*, CEPEL, 2012.

[4] S. GOMES Jr, T. S. AMARAL, F. L. LÍRIO, *User's Manual: PacDyn Version 9.4*, CEPEL, 2012.

[5] *IEEE Recommended Practice for Excitation System Models for Power System Stability Studies*, IEEE Standard 421.5(2005), April 2006.

Appendix A

In this appendix, the input file needed for the correct initialization of the ANAREDE software is presented in Figure A-1. This file is denoted as "*2_areas.pwf*" and is also available for download at the website.

```
01 TITU
02 2_Areas
03 DCTE
04 (Mn) ( Val) (Mn) ( Val) (Mn) ( Val) (Mn) ( Val) (Mn) ( Val) (Mn) ( Val)
05 BASE   100. DASE   100. TEPA     .1 EXST     .4 TETP     5. TBPA     5.
06 TLPP     1. TEPR     .1 QLST     .4 TLPR     .1 TLPQ     2. TSBZ    .01
07 TSBA     5. ASTP    .05 VSTP     5. TLVC     .5 TLTC    .01 TSFR  .1E-7
08 ZMAX   500. TLPV     .5 VDVM   200. VDVN    40. TUDC   .001 TADC    .01
09 PGER    30. TPST     .2 VFLD    70. ZMIN   .001 HIST    470 LFIT     10
10 ACIT     30 LFCV      1 DCIT     10 VSIT     10 LPIT     50 LFLP     10
11 PDIT     10 LCRT     96 LPRT     60 CSTP     5. ASDC     1.
12 ICIT     30 DMAX      5 FDIV     2. ICMN    .05 VART     5. TSTP     33
13 ICMV     .5 APAS    90. CPAR    70. VAVT     2. VAVF     5. VMVF    15.
14 VPVT     2. VPVF     5. VPMF    10. VSVF    20. VINF     1. VSUP     1.
15 TLSI     0. NDIR    20. STTR     5. TRPT   100. STIR     1. BFPO     0.
16 99999
17 DBAR
18 (Num)OETGb(    nome    )Gl( V)( A)( Pg)( Qg)( Qn)( Qm)(Bc  )( Pl)( Ql)( Sh)Are(Vf)M(1)(2)(3)(4)(5)(6)(7)(8)(9)(10
19     1 L1 1G1           1103020.1 700. 185.-.1E5 .1E6                        11000
20     2 L1 1G2           1101010.3 700.234.6-111111111                        11000
21     3 L2 1G3           11030 -7.719.1 176.-111111111                        11000
22     4 L1 1G4           11010-17. 700. 202.-111111111                        11000
23     5 L  2             1100613.6                                            11000
24     6 L  2             1 9783.52                                            11000
25     7 L  2             1 961-4.9                           967. 100. 200.   11000
26     8 L  2             1 949-19.                                            11000
27     9 L  2             1 971-32.                          1767. 100. 350.   11000
28    10 L  2             1 983-24.                                            11000
29    11 L  2             11008-14.                                            11000
30 99999
31 DLIN
32 (De )d O d(Pa )NcEP ( R% )( X% )(Mvar)(Tap)(Tmn)(Tmx)(Phs)(Bc  )(Cn)(Ce)Ns(Cq)(1)(2)(3)(4)(5)(6)(7)(8)(9)(10
33     1         5 1         1.6666         1.                     900.1000  1000
34     2         6 1         1.6666         1.                     900.1000  1000
35     3        11 1         1.6666         1.                     900.1000  1000
36     4        10 1         1.6666         1.                     900.1000  1000
37     6         5 1       .25   2.5 4.375                          900.1000  1000
38     6         7 1        .1    1.  1.75                          18002000  2000
39     7         8 1       1.1   11. 19.25                          900.1000  1000
40     7         8 2       1.1   11. 19.25                          900.1000  1000
41     8         9 1       1.1   11. 19.25                          900.1000  1000
42     8         9 2       1.1   11. 19.25                          900.1000  1000
43     9        10 1        .1    1.  1.75                          18002000  2000
44    10        11 1       .25   2.5 4.375                          900.1000  1000
45 99999
46 DCAR
47 (tp) (no ) C (tp) (no ) C (tp) (no ) C (tp) (no ) O (A) (B) (C) (D) (Vfl)
48 barr     7 E barr     9                          A   0   0   0   0   70.
49 99999
50 DGBT
51 (G ( kV)
52  2  230.
53  1   20.
54 99999
55 FIM
```

Figure A-1: 2_areas.pwf file