IEEE PES Task Force on Benchmark Systems for Stability Controls

Comparison Report – PSS/E versus ANATEM/PacDyn

Results for Benchmark #1- The Three-Machine versus Infinite-Bus System

Version 1 – July 2nd , 2014

Fernando J. De Marco, Leonardo Lima and Nelson Martins

The results presented in this report correspond to time-domain simulations of different disturbances and eigenvalue calculations performed with PSS/E and ANATEM/PacDyn software over the 3-machine versus infinite bus.

The approach adopted to perform the time domain simulations and eigenvalue calculation are described in sequence.

- **Time-domain simulations**

The main objective associated with the selection of the disturbances is to assess the system damping and the effectiveness of the proposed stabilizers in providing damping to these oscillations. The time-domain responses are presented for the generator's speed and electrical power, with and without PSS.

The first set of simulations comprises the connection of a 50 MVAr reactor at the point of interconnection of the generators with the system (bus #5) at $t = 1.0$ second. The reactor is disconnected 100 ms later, without any changes in the system topology. This is a very small disturbance, and as such leads to results that correspond to the linear response of the system. Furthermore, given the location where the disturbance is applied, it tends to excite primarily the inter-area oscillation, all three generators against the infinite bus.

The second set of simulations corresponds to simultaneous changes in voltage reference in all generator units, applied at $t = 1.0$ second. The applied step changes are as follows:

Generator	Step in V_{ref}
G1	+3%
G2	–1%
G3	–2%

These changes in voltage reference were selected in order to have a relatively small impact on the inter-area oscillation mode while exciting the intra-plant mode (between generators 1 and 2) and the local mode (generators 1 and 2 oscillating against generator 3).

- **Eigenanalysis**

The eigenanalysis consists in the calculation of the linear system eigenvalues and participation factors. In particular, for the three electromechanical modes of the system, the participation factors of all the state variables are calculated along with the speed mode-shapes. The results are summarized in tables.

1. Comparison of results ANATEM/PacDyn vs PSS/E

1.1 Time domain simulations

The time-domain responses for the two perturbations simulated with PSS/E and ANATEM programs are compared in Sections 1.1.a) and 1.1. An acceptable matching is qualitatively appreciated between the results of both programs, for the cases with and without PSS.

1.1. a) 50 MVAr Reactor at Bus #5

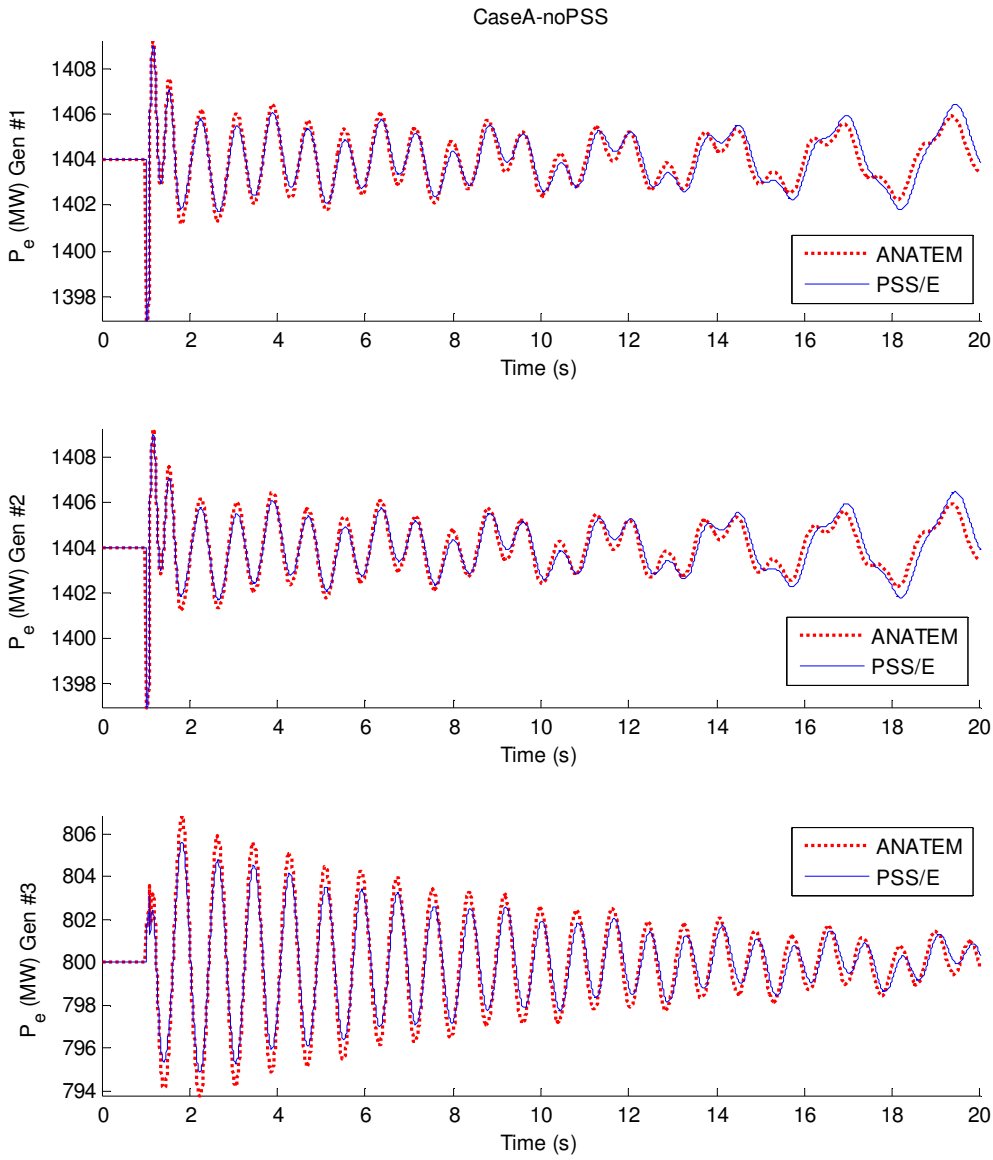

Figure 1: Response to a 50 MVAr Reactor Applied to Bus #5 (Generator Active Power, no PSS).

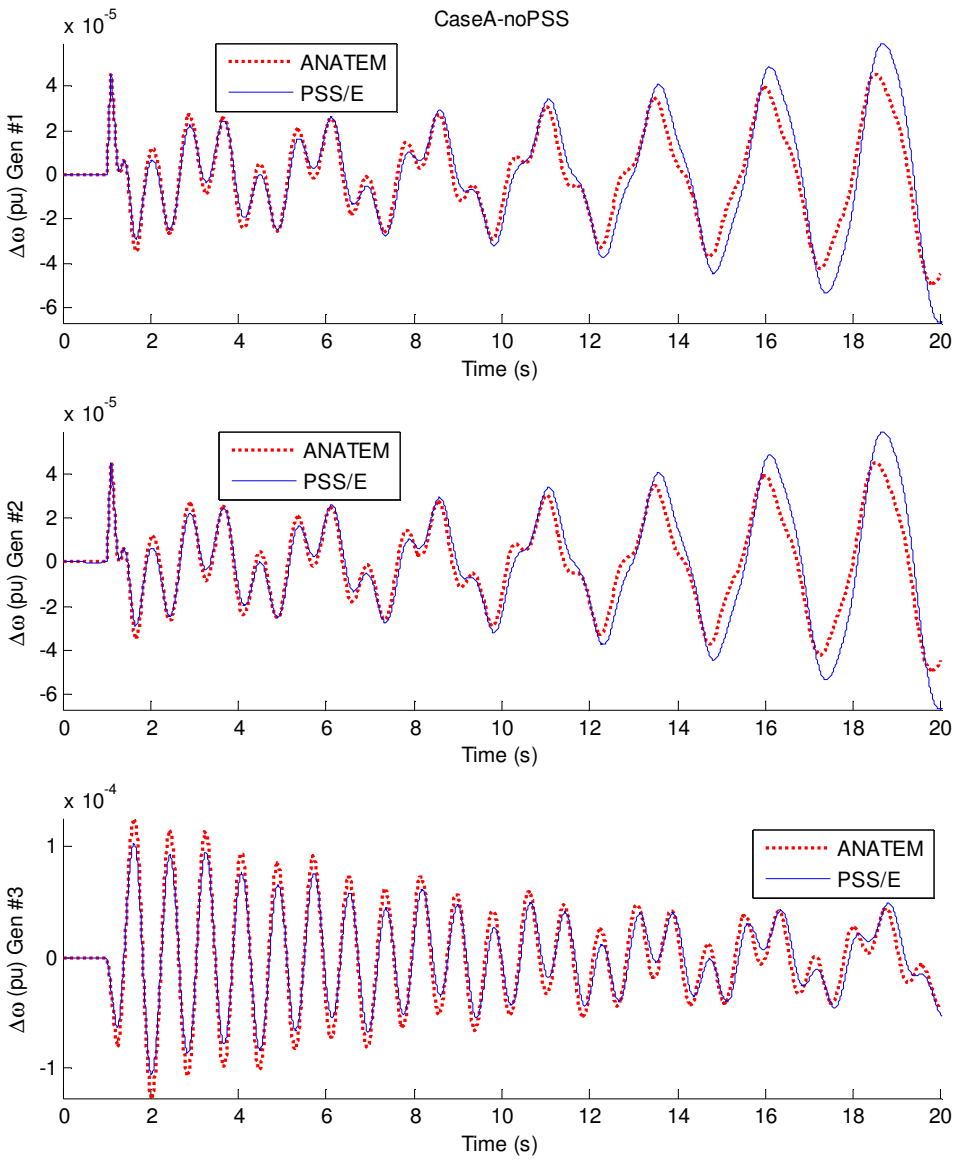

Figure 2: Response to a 50 MVAr Reactor Applied to Bus #5 (Generator Speed, no PSS).

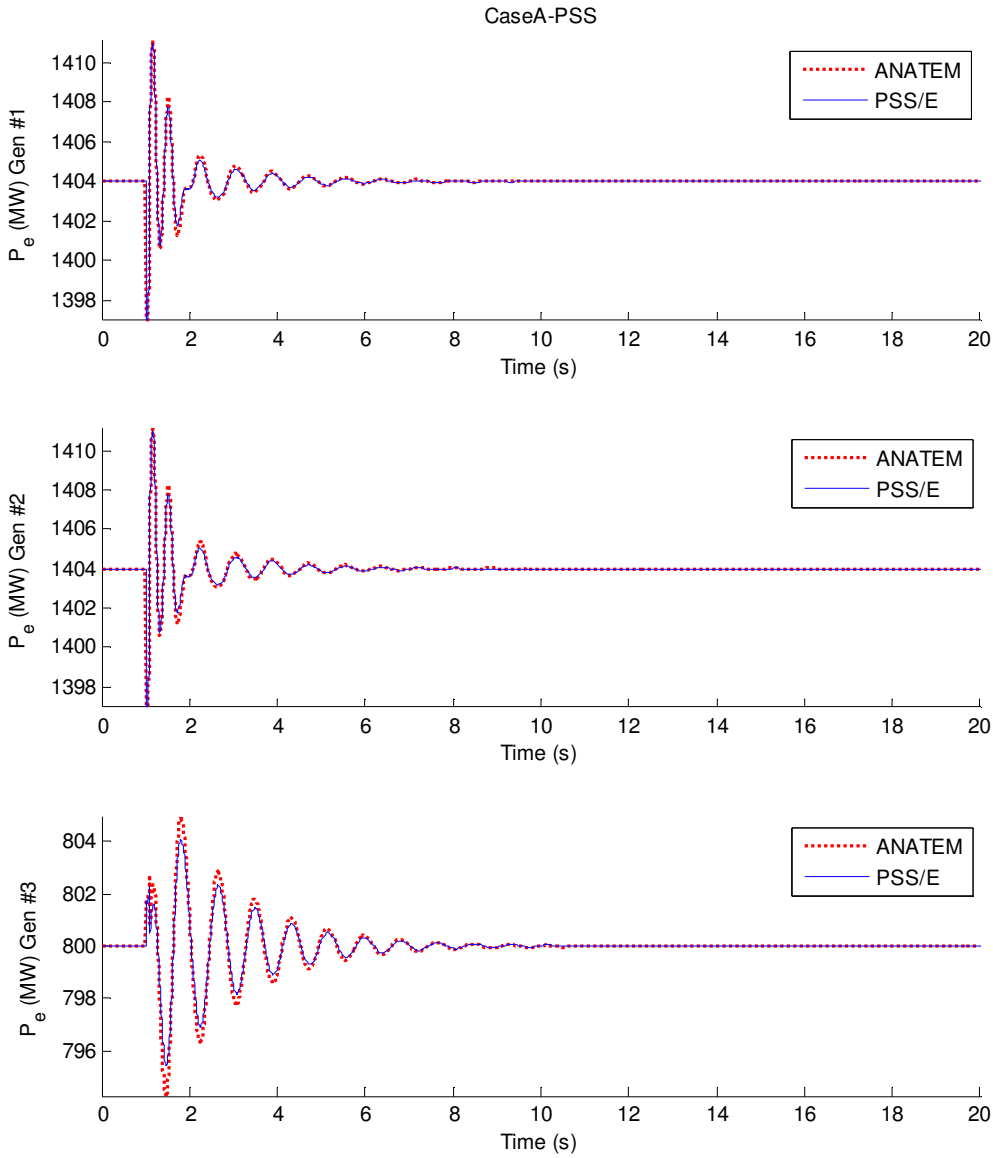

Figure 3: Response to a 50 MVAr Reactor Applied to Bus #5 (Generator Active Power, with PSS).

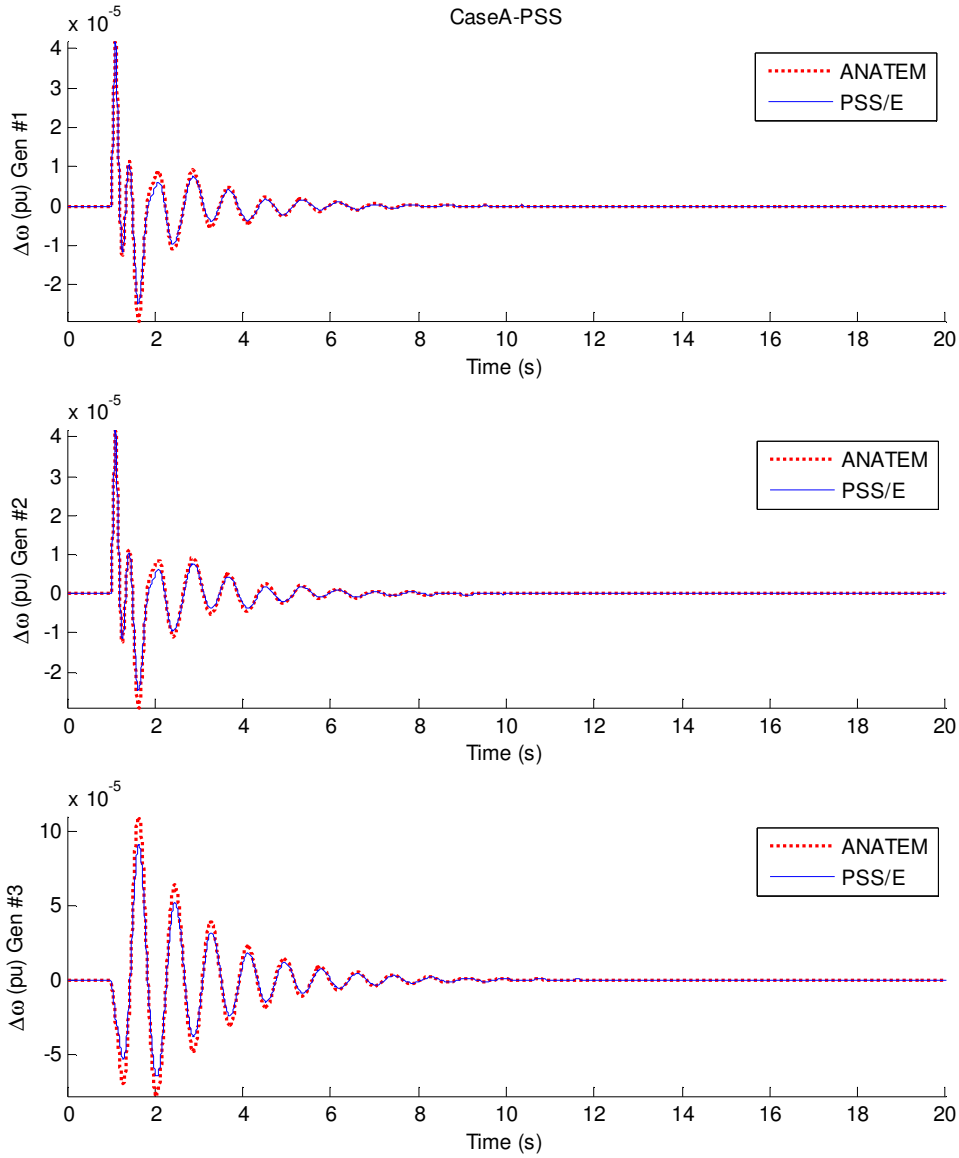

Figure 4: Response to a 50 MVAr Reactor Applied to Bus #5 (Generator Speed, with PSS).

1.1. b) Steps in the Reference Voltage of the AVRs

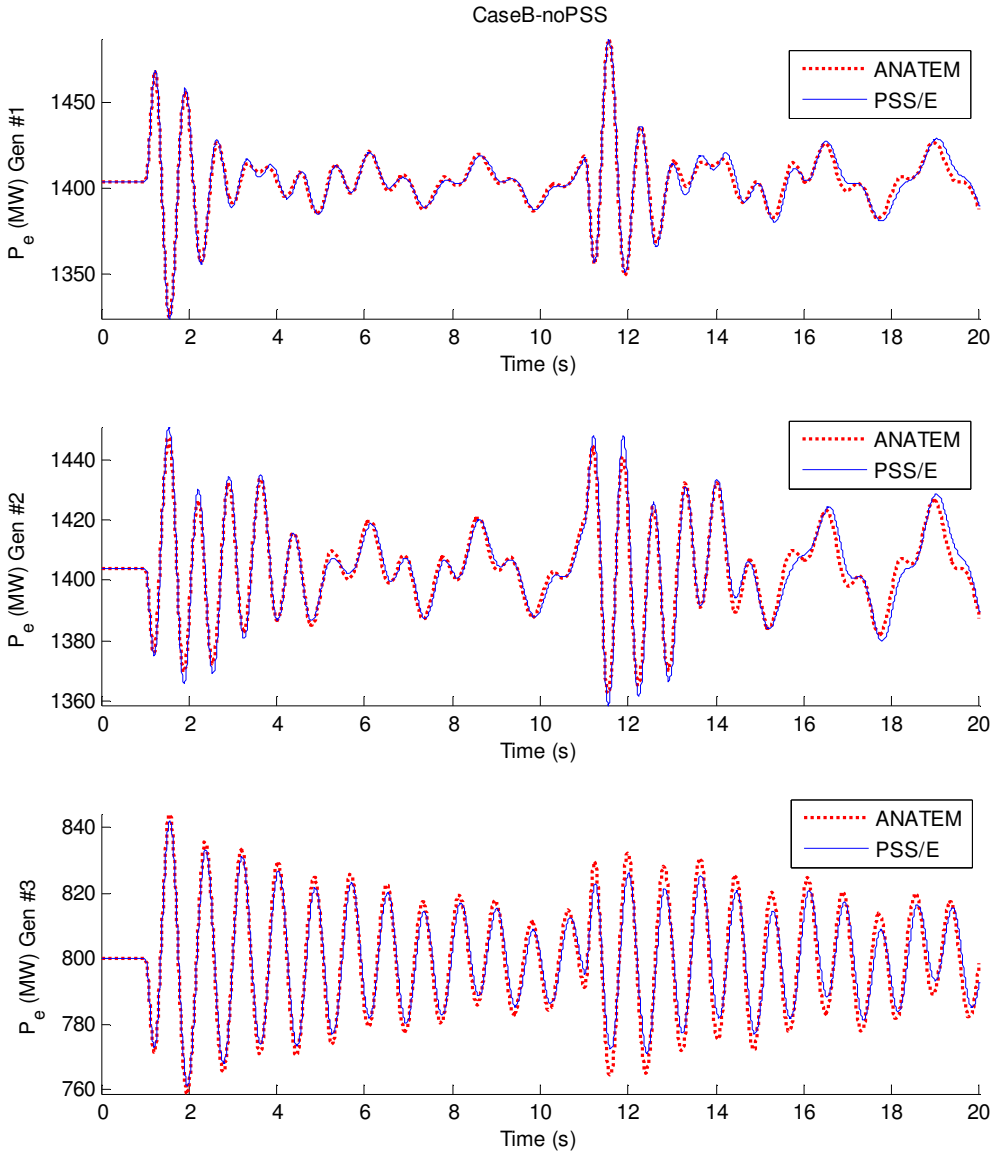

Figure 5: Response to steps in the reference voltages of the AVRs (Generator Power, no PSS).

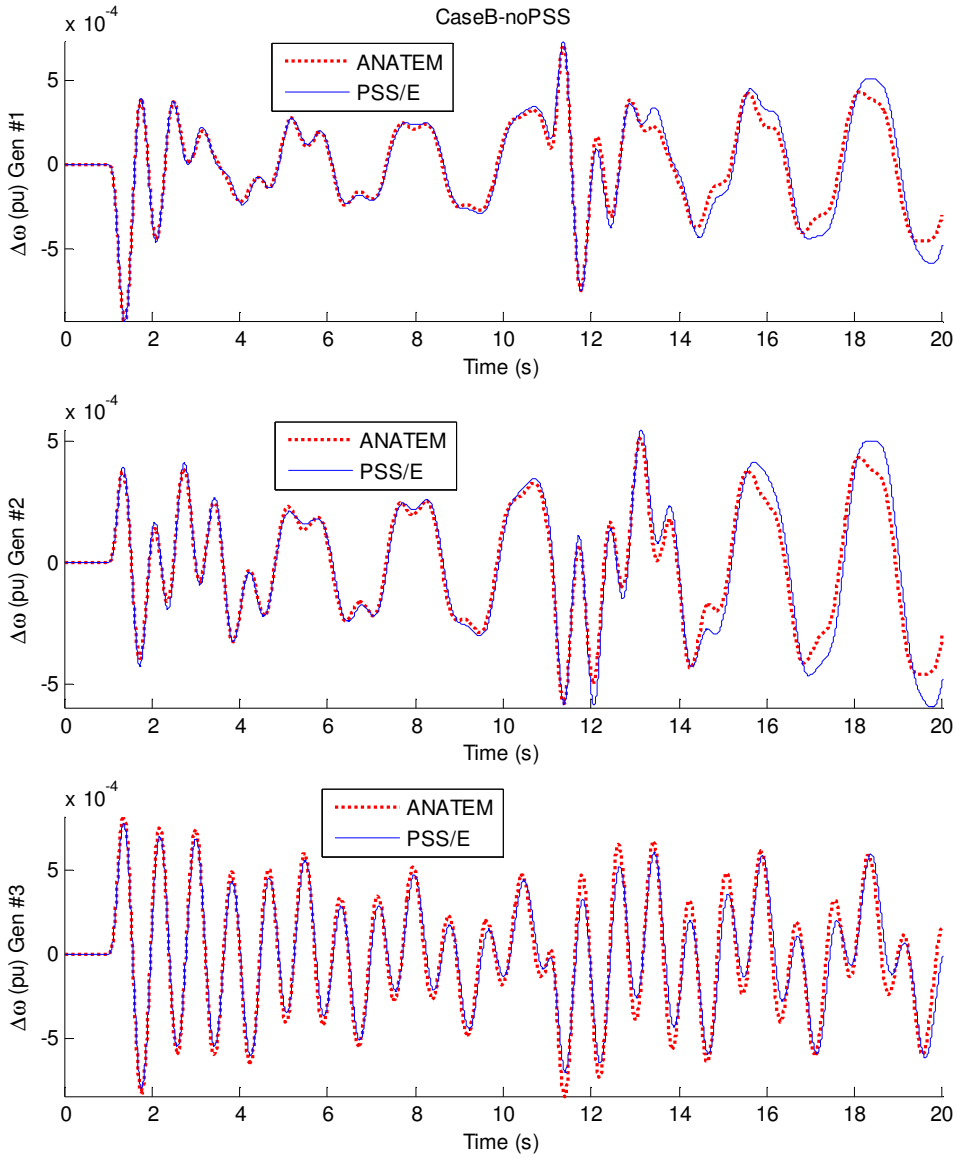

Figure 6: Response to steps in the reference voltages of the AVRs (Generator Speeds, no PSS).

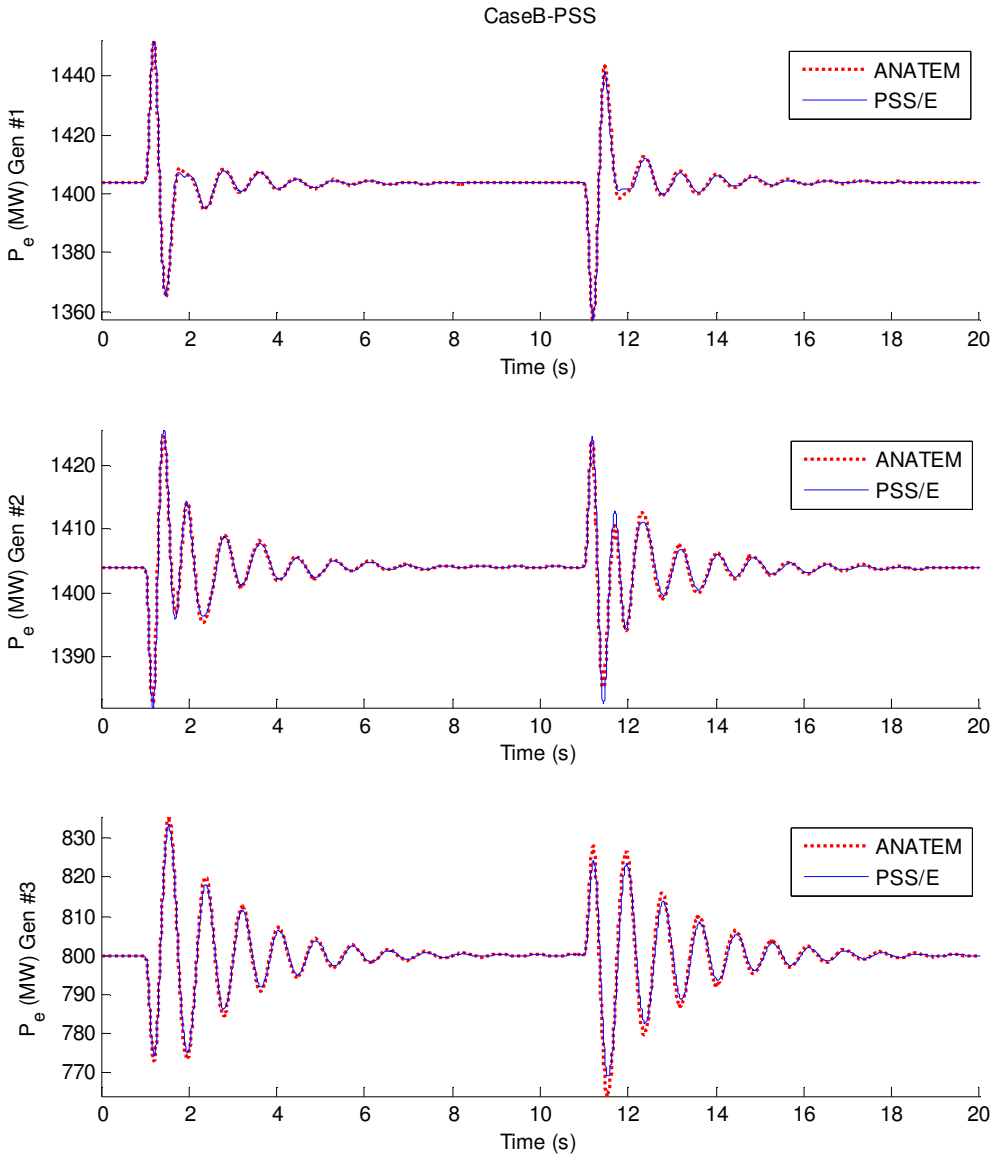

Figure 7: Response to steps in the reference voltages of the AVRs (Generator Power, with PSS).

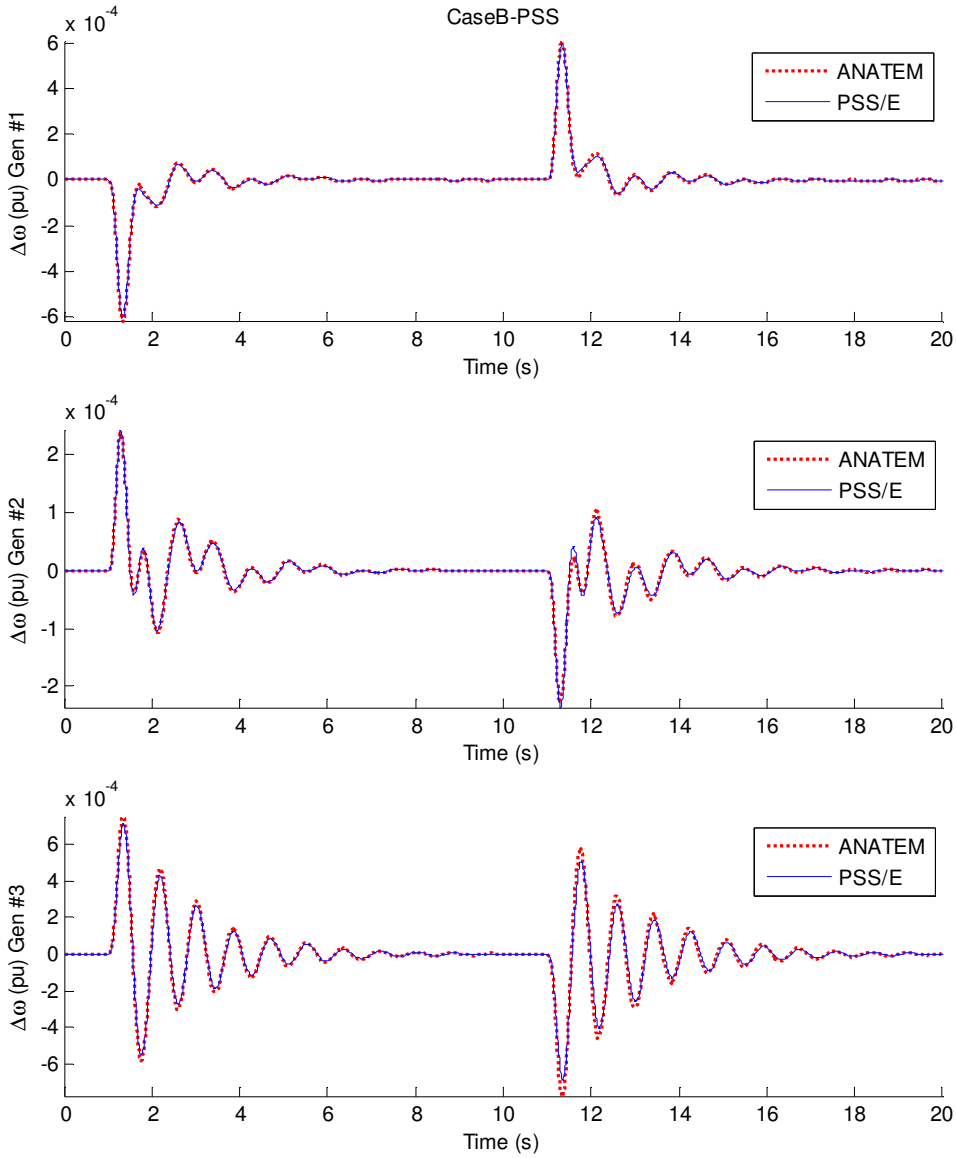

Figure 8: Response to steps in the reference voltages of the AVRs (Generator Speed, with PSS).

1.2 Eigenanalysis without PSS

The complete set of eigenvalues for the system without PSS, calculated with PSS/E program LSYSAN and PacDyn, are presented in Figure 9.a). Figure 9.b) is an enlarged view of Figure 9.a) in the region of the electromechanical modes. The speed mode-shapes of the three electromechanical modes calculated by both programs are shown in **Figure 10**. The mode-shapes calculated by LSYSAN had been normalized by the respective elements of highest magnitude.

The comparison of results in Figure 9 and Figure 10 shows a good matching of the electromechanical modes and their respective speed mode-shapes calculated by the different software.

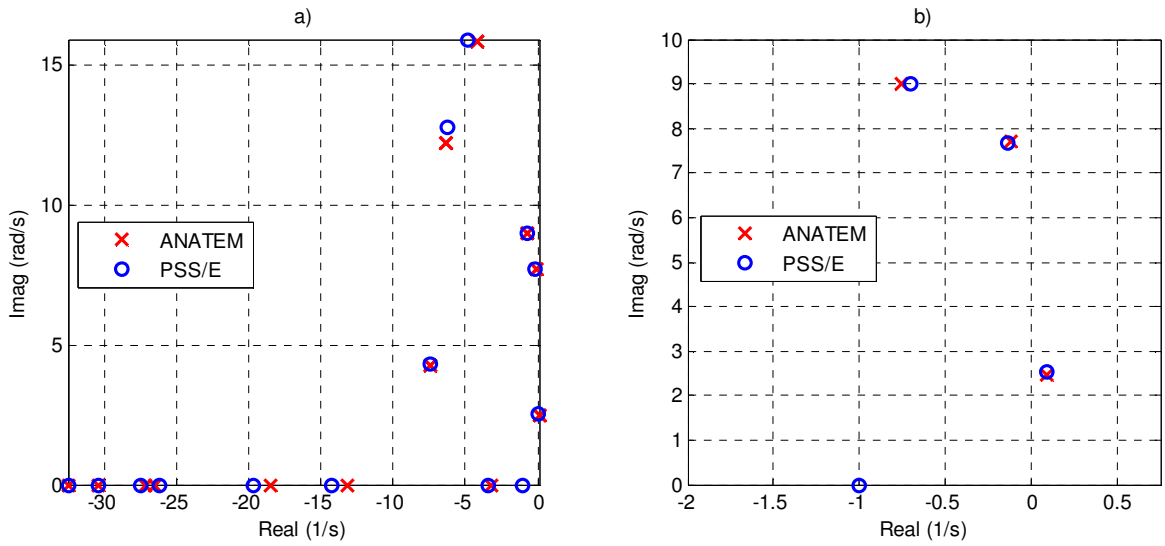

Figure 9: Comparison of Eigenvalues Calculated with PSS/E Program LSYSAN and PacDyn. a) Complete set of eigenvalues; b) Enlarged view in the region of the electromechanical modes.

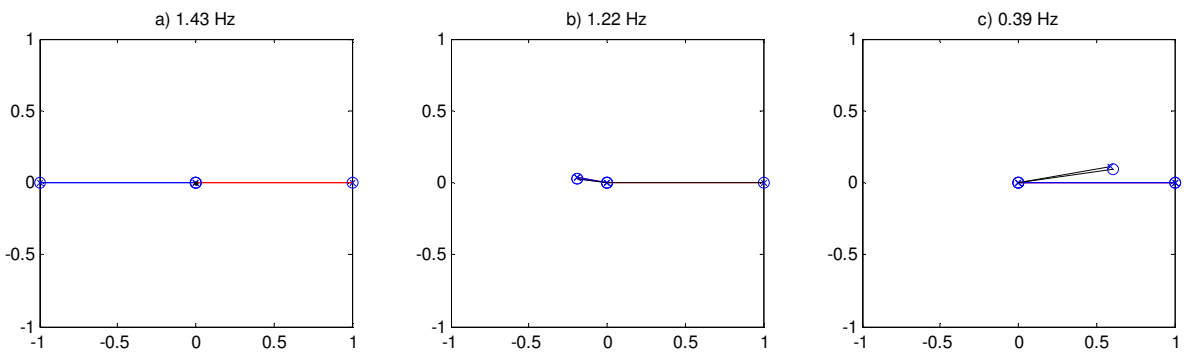

Figure 10: Comparison of the Speed Mode-shapes Calculated with PSS/E Program LSYSAN (×) and PacDyn (○).

2. PacDyn/Anatem Results

2.1 Dynamic Simulation Models

The models and associated parameters for the dynamic simulation models used in the ANATEM/PacDyn setup are described in this section.

2.1.1 Synchronous Machines

The generator model to represent the salient pole units (generators 1 and 2) is the ANATEM model 02, shown in the block diagram in Figure 11, which is a 5th order dynamic model. The ANATEM generator model 03, shown in the block diagram in Figure 12 , is used to represent the round rotor unit (generator 3), which is a 6th order dynamic model. Both generator models represent the saturation as the exponential function $y = Ae^{B(x-C)}$, with the parameters in Table 1.

Table 1: Saturation Parameters for ANATEM's generator models

Generator model	Parameter		
	A	B	C
Model 02	0.029406	5.42112	0.80
Model 03	0.016	10.50	0.80

Details about the implementation of the model are available in the software documentation [1].

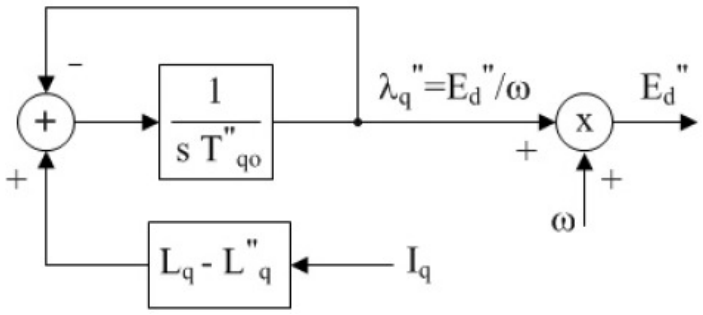

a) Quadrature axis

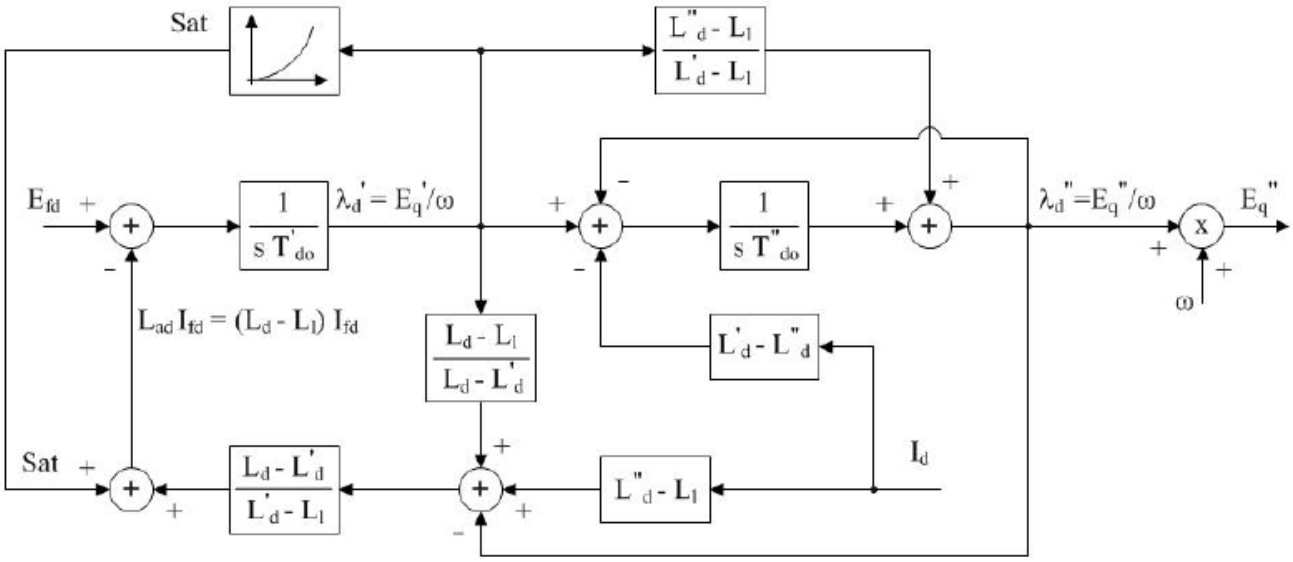

b) Direct axis

Figure 11: Block Diagram for the ANATEM Model 02

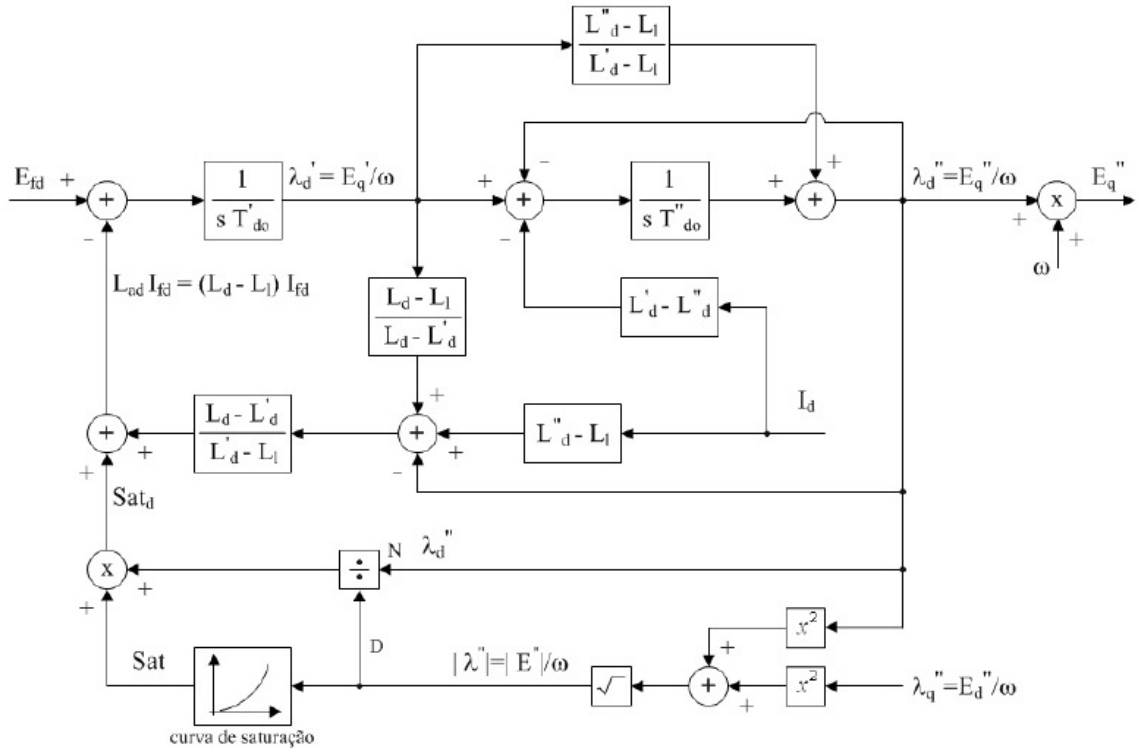

a) Direct axis

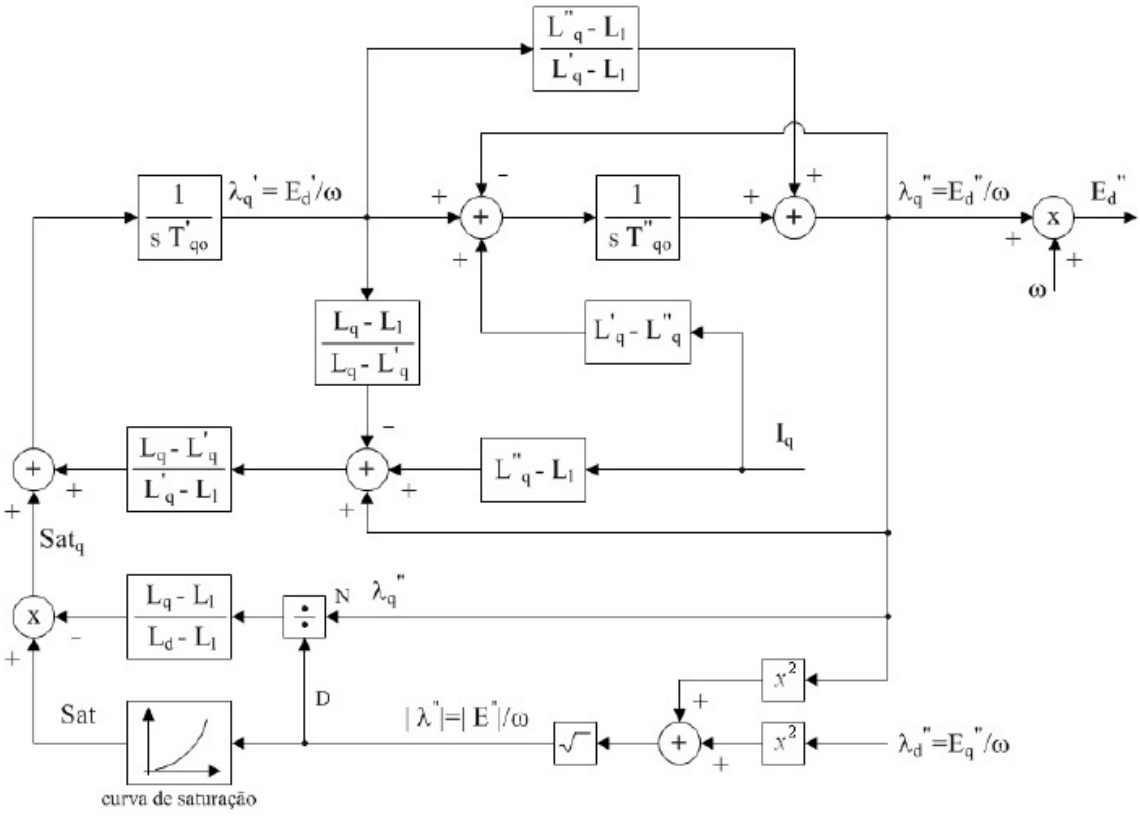

b) Quadrature axis

Figure 12: Block Diagram for the ANATEM Model 03

2.1.2 Excitation Systems

The excitation systems are represented by a simple first order model, represented in ANATEM by a used model implementing the transfer function

$$(E_{fd}/(V_{ref}(s)-V_t(s)) = K_A/(1+sT_A),$$

with the parameters in Table 2.

Table 2: Parameters of the Excitation Systems modeled in ANATEM

Generator	Parameter	Value
	K_A	T_A
#1 and #2	100 pu	50 ms
#3	150 pu	50 s.

2.1.3 Power System Stabilizers

The power system stabilizers are represented in ANATEM by the user model with the block diagram in **Erro! Fonte de referência não encontrada.**, with the parameters in Table 3.

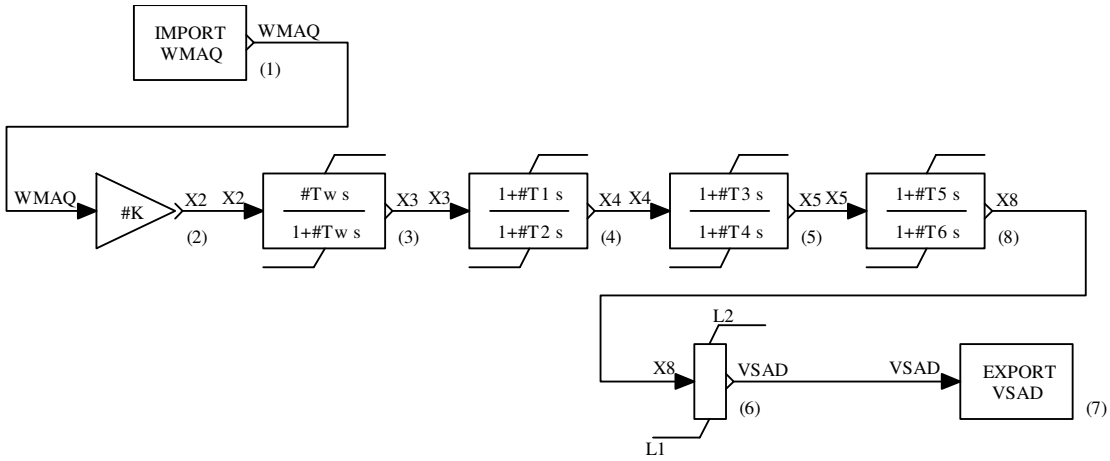

Figure 13: Power System Stabilizer Modeled in ANATEM.

Table 3: Parameters of the Power System Stabilizers modeled in ANATEM

Parameter	Value	Unit
T_1	0.142	s
T_2	0.014	s
T_3	0.142	s
T_4	0.014	s
T_5	0.158	s
T_6	0.641	S
T_w	3	s
K_S	35	pu
L_2	0.05	pu
L_1	–0.05	pu

2.2 Time domain simulations

2.2. a) 50 MVAr Reactor at Bus #5

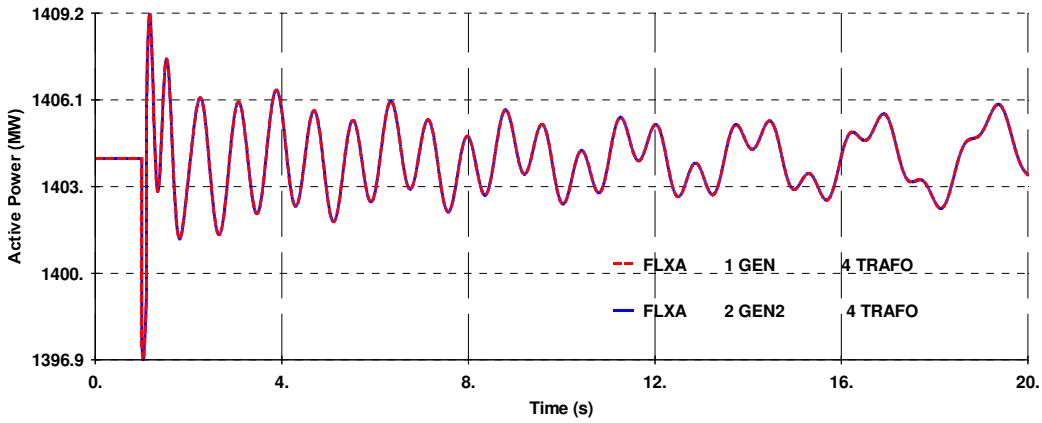

Figure 14: Electrical Power Output, no PSS

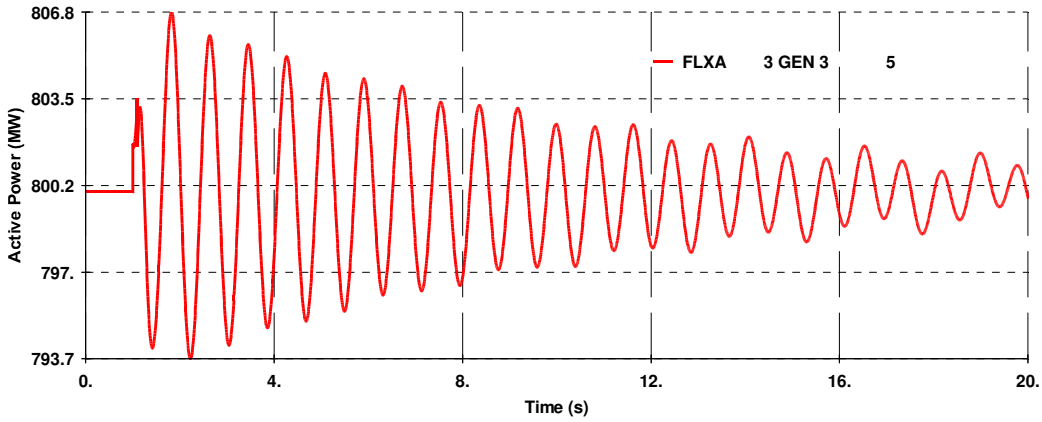

Figure 15: Electrical Power Output, no PSS

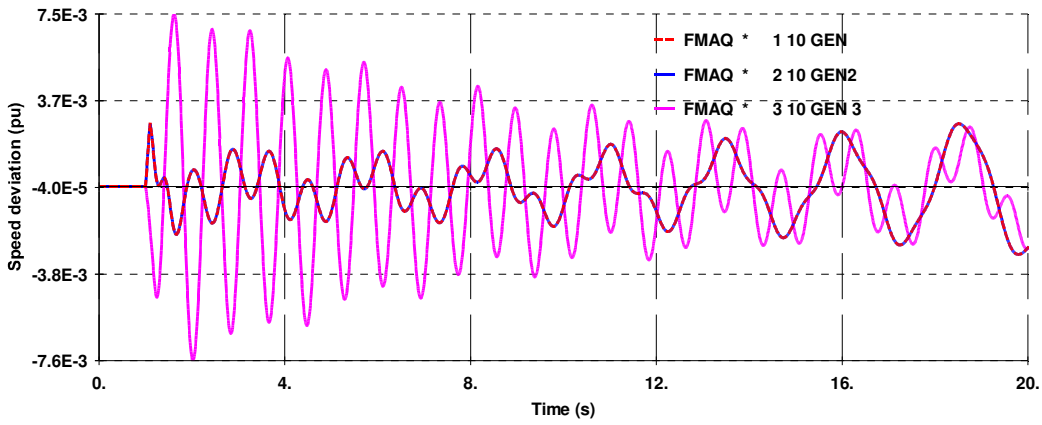

Figure 16: Rotor Speed Deviation, no PSS

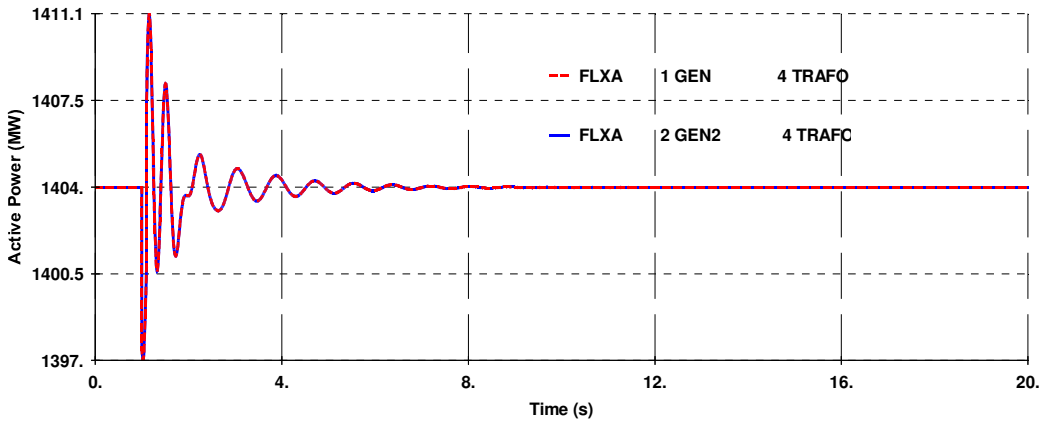

Figure 17: Electrical Power Output, with PSS

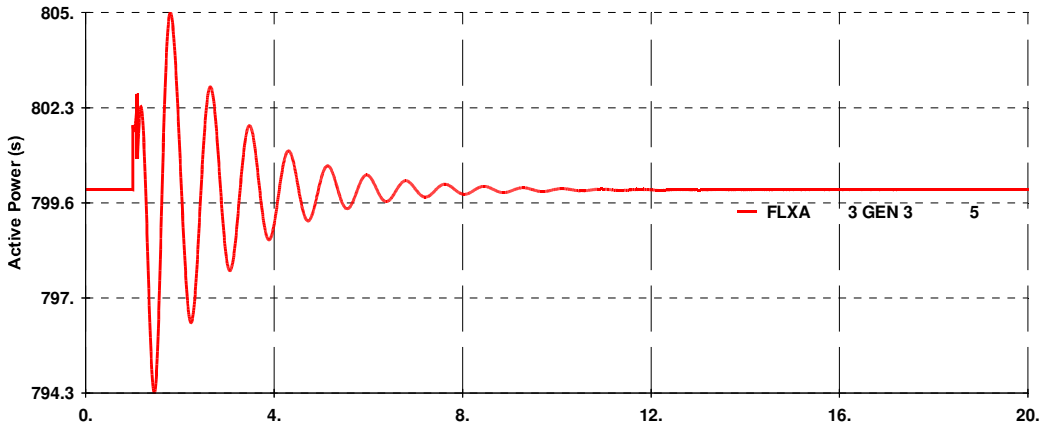

Figure 18: Electrical Power Output, with PSS

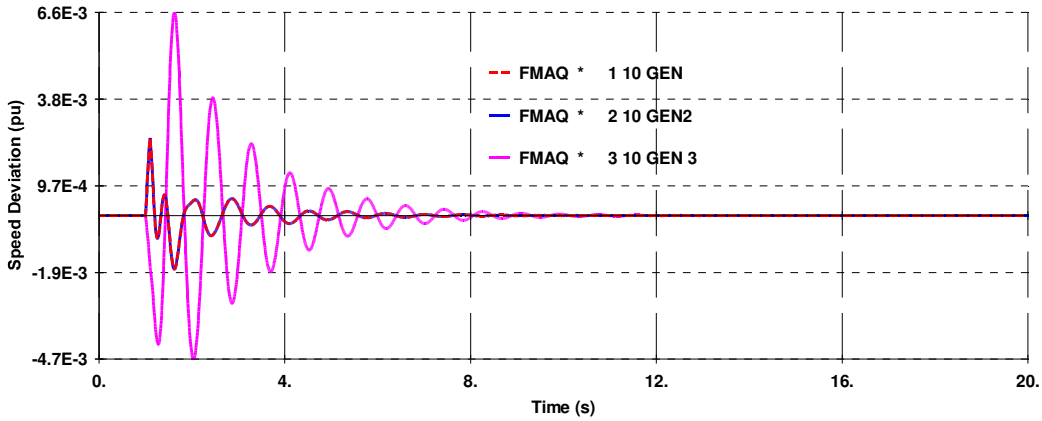

Figure 19: Rotor Speed Deviation, with PSS

2.2. b) Steps in Voltage Reference

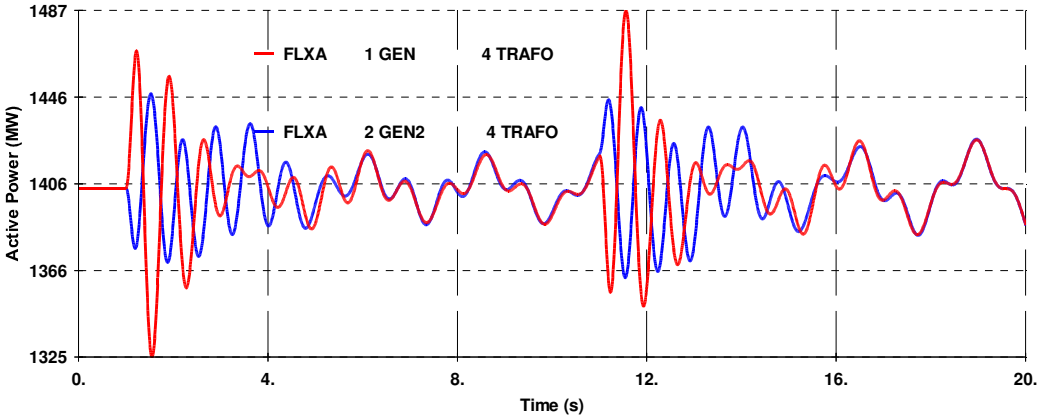

Figure 20: Electrical Power Output, no PSS

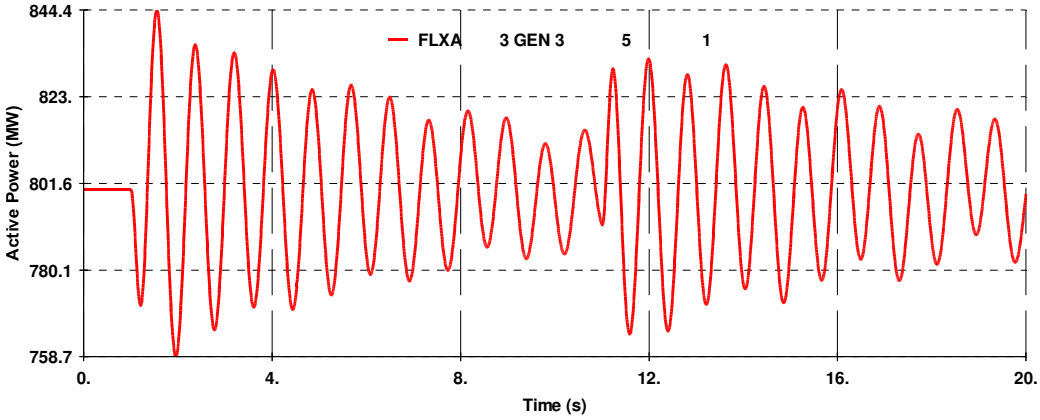

Figure 21: Electrical Power Output, no PSS

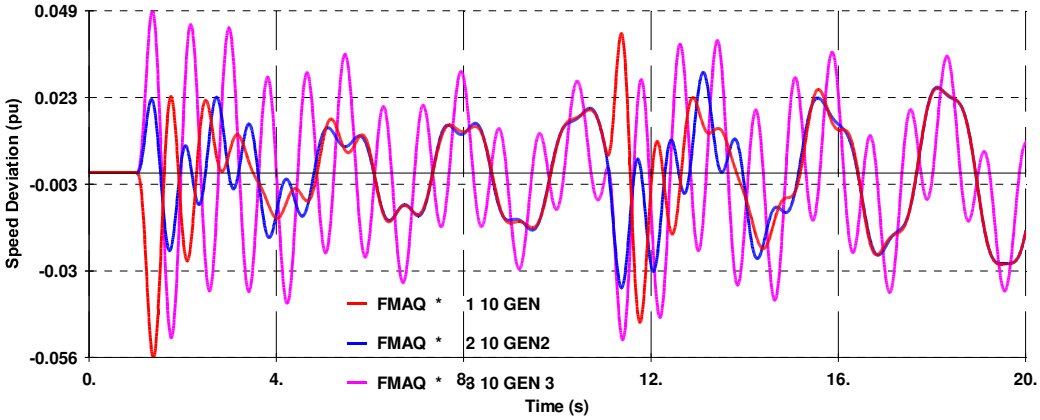

Figure 22: Rotor Speed Deviation, no PSS

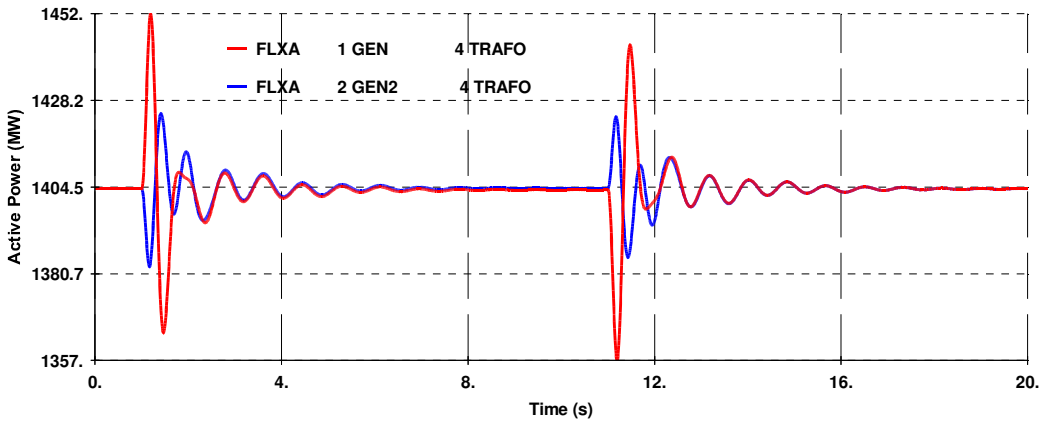

Figure 23: Electrical Power Output, with PSS

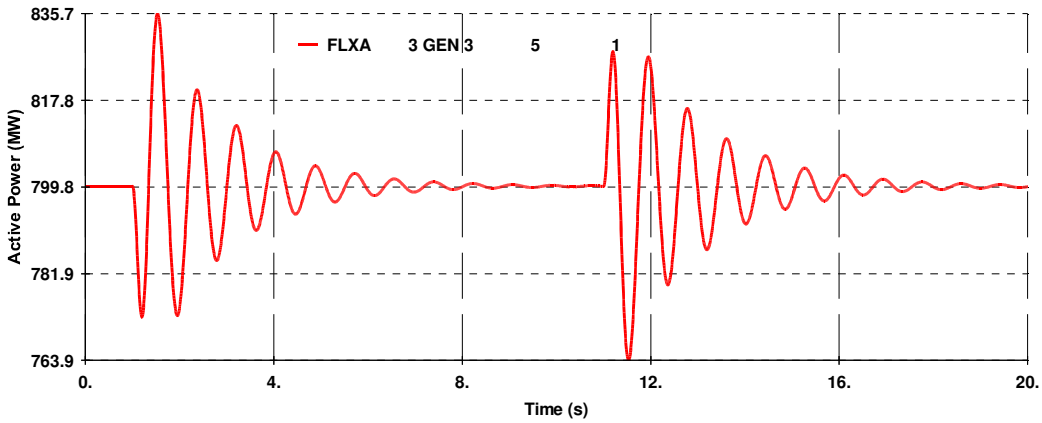

Figure 24: Electrical Power Output, with PSS

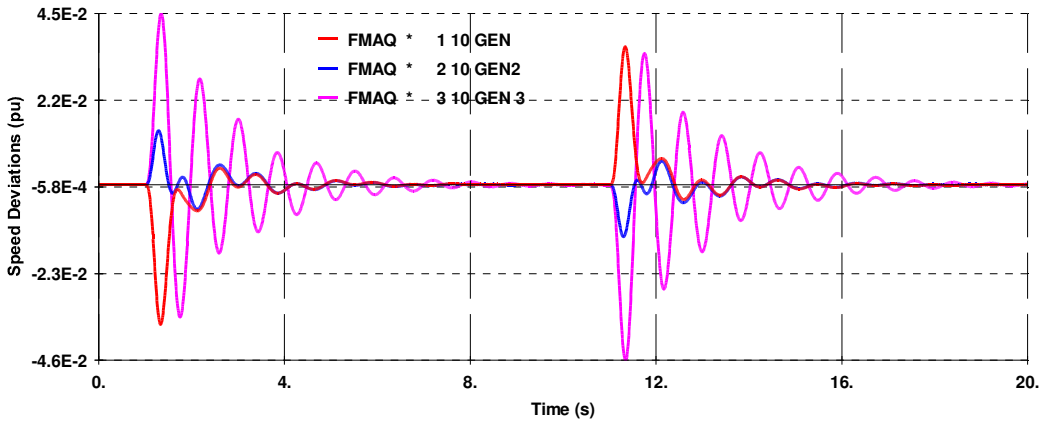

Figure 25: Rotor Speed Deviation, PSS

2.3 Eigenanalysis without PSS

The version of PacDyn used to produce eigenanalysis results (v9.4.2) recognizes the execution codes in ANATEM format, so the files used to run the time-domain simulations in ANATEM are loaded in PacDyn to perform the eigenanalysis. The QR (EISPACK) method is used to obtain the full eigensolution of the state matrix of the given system.

When the "QR Method" function is executed with the original parameters of the saturation curve of the synchronous machine model of generator #3, the program displays the error message "Initializing iterations for saturation not converged; Bus3 Gen 3".Therefore, the parameters of the saturation curve of generator 3 were slightly changed according to Table 4**Erro! Fonte de referência não encontrada.**. It has been verified that this change has negligible impact on the time responses simulated in Section 2.1, so a minor the impact on the eigenanalysis calculations is expected.

Table 4: Changes in the saturation curve parameters of generator 3.

Parameter	Original value	Assigned value
Y1	0.016	0.015
Y2	10.50	10.45
X1	0.80	0.81

Table 5: Eigenvalues and Participation Factors Calculated with PacDyn

#	Real	Imaginary	Module	Freq. (Hz)	Damp(%)	Part. Factor			
1	-4.1643	15.83	16.368	2.5194	25.441	EQ'	GEN 3	#	3
2	-6.3427	12.21	13.759	1.9433	46.098	EQ'	GEN 3	#	3
3	-0.7567	8.9905	9.0223	1.4309	8.3868	WW	GEN2	#	2
4	-0.1194	7.7079	7.7088	1.2267	1.5495	WW	GEN 3	#	3
5	-7.3925	4.239	8.5216	0.6747	86.75	EQ'	GEN2	#	2
6	0.08944	2.4625	2.4641	0.3919	-3.6296	WW	GEN2	#	2
7	-3.2213	0	3.2213	0	100	ED'	GEN 3	#	3
8	-13.119	0	13.119	0	100	ED''	GEN	#	1
9	-18.481	0	18.481	0	100	ED''	GEN	#	1
10	-26.524	0	26.524	0	100	ED''	GEN 3	#	3
11	-27.17	0	27.17	0	100	EQ''	GEN2	#	2
12	-30.368	0	30.368	0	100	x 0005	AVR-G1	#	1
13	-32.491	0	32.491	0	100	EQ''	GEN 3	#	3
14	0.08944	-2.4625	2.4641	-0.3919	-3.6296				
15	-7.3925	-4.239	8.5216	-0.6747	86.75				
16	-0.1194	-7.7079	7.7088	-1.2267	1.5495				
17	-0.7567	-8.9905	9.0223	-1.4309	8.3868				
18	-6.3427	-12.21	13.759	-1.9433	46.098				
19	-4.1643	-15.83	16.368	-2.5194	25.441				

Table 6: Speed Mode-shapes Calculated with PacDyn

Mode 3 (-0.7567±j8.9905)			Mode 4 (-0.1194±j7.7079)			Mode 6 (0.08944±j2.4625)		
Module	Phase	Bus Name	Module	Phase	Bus Name	Module	Phase	Bus Name
1	0	GEN #1	1	0	GEN 3 #3	1	0	GEN #1
1	180	GEN2 #2	0.1893	170.01	GEN #1	1	2.84E-14	GEN2 #2
			0.1893	170.01	GEN2 #2	0.6149	9.1949	GEN 3 #3

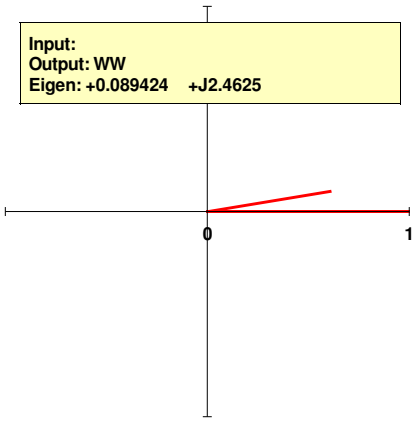

Figure 26: Speed Mode-shape Calculated with PacDyn for Mode #6.

Table 7: Participation Factors Calculated with PacDyn for Mode #6

Mode 6 (0.08944±j2.4625)					
Module	Phase	Bus Name			Var
1	0	GEN2	#	2	DELT
1	1.46E-09	GEN	#	1	DELT
1	4.07E-10	GEN2	#	2	WW
1	9.47E-10	GEN	#	1	WW
0.2253	6.5729	GEN 3	#	3	DELT
0.2253	6.5729	GEN 3	#	3	WW
0.04312	75.131	GEN 3	#	3	EQ'
0.04208	91.789	GEN	#	1	EQ'
0.04208	91.789	GEN2	#	2	EQ'
0.01975	-11.779	GEN 3	#	3	ED'
0.00708	122.65	AVR-G3	#	100	x 0005
0.00622	20.437	GEN 3	#	3	ED''
0.00592	138.25	GEN	#	1	EQ''
0.00592	138.25	GEN2	#	2	EQ''
0.00576	157.2	AVR-G1	#	1	x 0005
0.00576	157.2	AVR-G2	#	2	x 0005
0.00455	127.82	GEN 3	#	3	EQ''
0.00255	-129.48	GEN	#	1	ED''
0.00255	-129.48	GEN2	#	2	ED''

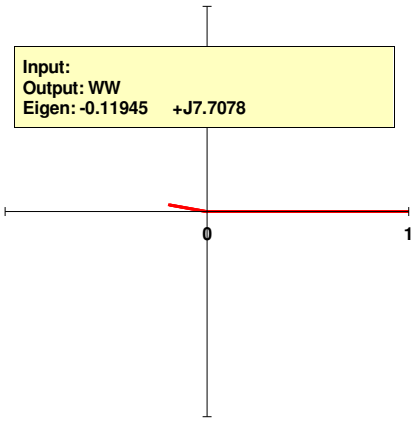

Figure 27: Speed Mode-shape Calculated with PacDyn for Mode #4.

Table 8: Participation Factors Calculated with PacDyn for Mode #4

Mode 4 (-0.1194±j7.7079)					
Module	Phase	Bus Name			Var
1	0	GEN 3	#	3	WW
1	-3.18E-15	GEN 3	#	3	DELT
0.08885	-143.75	GEN 3	#	3	ED''
0.06946	-4.7664	GEN	#	1	DELT
0.06946	-4.7664	GEN	#	1	WW
0.06946	-4.7664	GEN2	#	2	WW
0.06946	-4.7664	GEN2	#	2	DELT
0.05088	41.415	GEN	#	1	EQ'
0.05088	41.415	GEN2	#	2	EQ'
0.02957	121.35	GEN 3	#	3	ED'
0.02098	-73.227	GEN 3	#	3	EQ'
0.0197	108.27	AVR-G1	#	1	x 0005
0.0197	108.27	AVR-G2	#	2	x 0005
0.01816	95.821	GEN	#	1	EQ''
0.01816	95.821	GEN2	#	2	EQ''
0.01549	-69.462	GEN 3	#	3	EQ''
0.01013	-9.761	AVR-G3	#	100	x 0005
0.00516	-161.05	GEN	#	1	ED''
0.00516	-161.05	GEN2	#	2	ED''

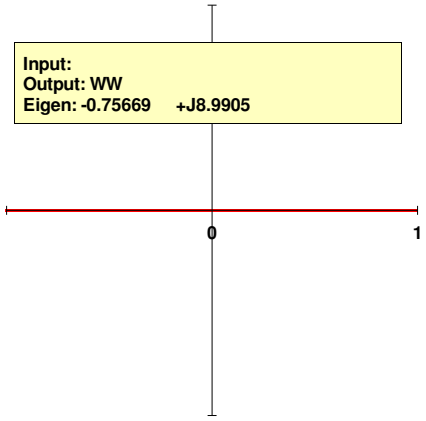

Figure 28: Speed Mode-shape Calculated with PacDyn for Mode #3.

Table 9: Participation Factors Calculated with PacDyn for Mode #3

Mode 3 (-0.7567±j8.9905)					
Module	Phase	Bus Name			Var
1	0	GEN	#	1	WW
1	-1.38E-13	GEN2	#	2	DELT
1	1.19E-14	GEN	#	1	DELT
1	-1.32E-13	GEN2	#	2	WW
0.1846	-150.21	GEN	#	1	ED''
0.1846	-150.21	GEN2	#	2	ED''
0.05986	-89.857	GEN2	#	2	EQ'
0.05986	-89.857	GEN	#	1	EQ'
0.0317	-80.296	GEN2	#	2	EQ''
0.0317	-80.296	GEN	#	1	EQ''
0.0295	-24.72	AVR-G2	#	2	x 0005
0.0295	-24.72	AVR-G1	#	1	x 0005
6.80E-30	103.4	GEN 3	#	3	DELT
6.75E-30	103.75	GEN 3	#	3	WW
6.30E-31	-40.955	GEN 3	#	3	ED''
2.16E-31	-134.9	GEN 3	#	3	ED'
1.79E-31	28.185	GEN 3	#	3	EQ'
1.37E-31	41.1	GEN 3	#	3	EQ''
8.27E-32	92.08	AVR-G3	#	100	x 0005

3. PSS/E Results

3.1 Dynamic Simulation Models

The models and associated parameters for the dynamic simulation models used in this PSS/E setup are described in this section.

The network impedances and load flow input data coincide with that used in the ANATEM/PacDyn setup. A large load (10000MW + j2000MVAr, 100% constant-P) was added to bus 6 to ensure that the equivalent machine at the infinite bus is a generator (injecting power into the grid), although this is probably unnecessary and the results would be the same with the infinite bus absorbing power from the grid.

3.1.1 Synchronous Machines

The generator model to represent the salient pole units (generators 1 and 2) is the PSS/E model GENSAE, shown in the block diagram in Figure 29, which is a 5th order dynamic model. The PSS/E generator model GENROE, shown in the block diagram in Figure 30, is used to represent the round rotor unit (generator 3), which is a 6th order dynamic model.

Both generator models represent the saturation by the geometric (exponential) function $S = S1.0\ E^X$, where $X = \ln(S1.2/S1.0)/\ln(E1.0)$ and E is the input. The saturation factors are presented in Table 10.

Table 10: Saturation Parameters for PSS/E Generator Models

Generator model	**Parameter**	
	S(1.0)	S(1.2)
GENSAE	0.087	0.257
GENROE	0.13	1.067

Details about the implementation of the model are available in the software documentation [2].

The calculated rated field current for this salient pole units 1.986 pu (considering 0.80 rated power factor). The round rotor unit has a rated field current of 2.92 pu considering 0.95 rated power factor. These calculations comprise the initialization of the generator model at full (rated) power output, considering their rated power factor. It should be noted that in PSS/E models, due to the choice of base values for generator field voltage and generator field current, these variables are numerically the same, in steady state, when expressed in pu.

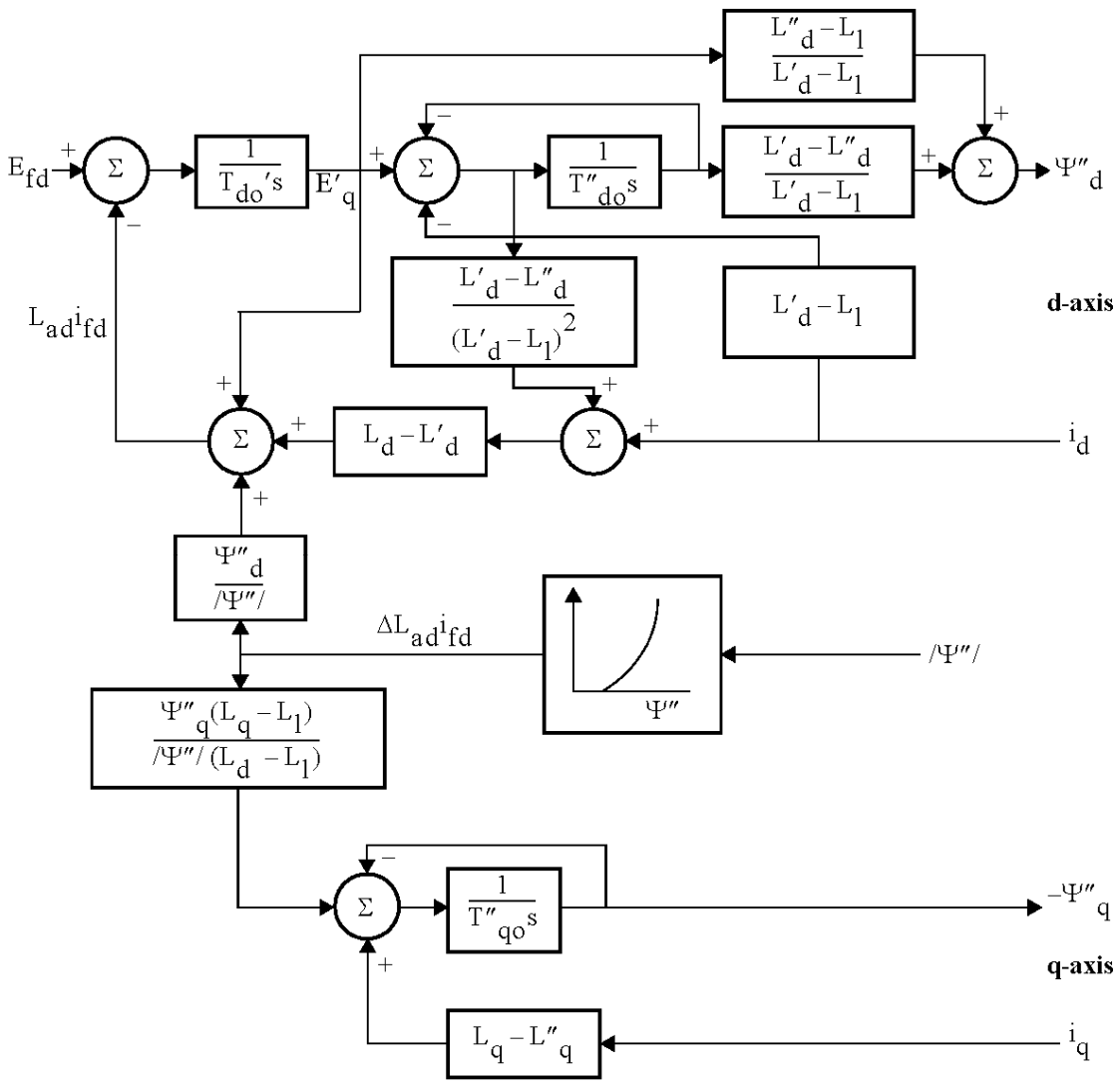

Figure 29: Block Diagram for the PSS/E Model GENSAE

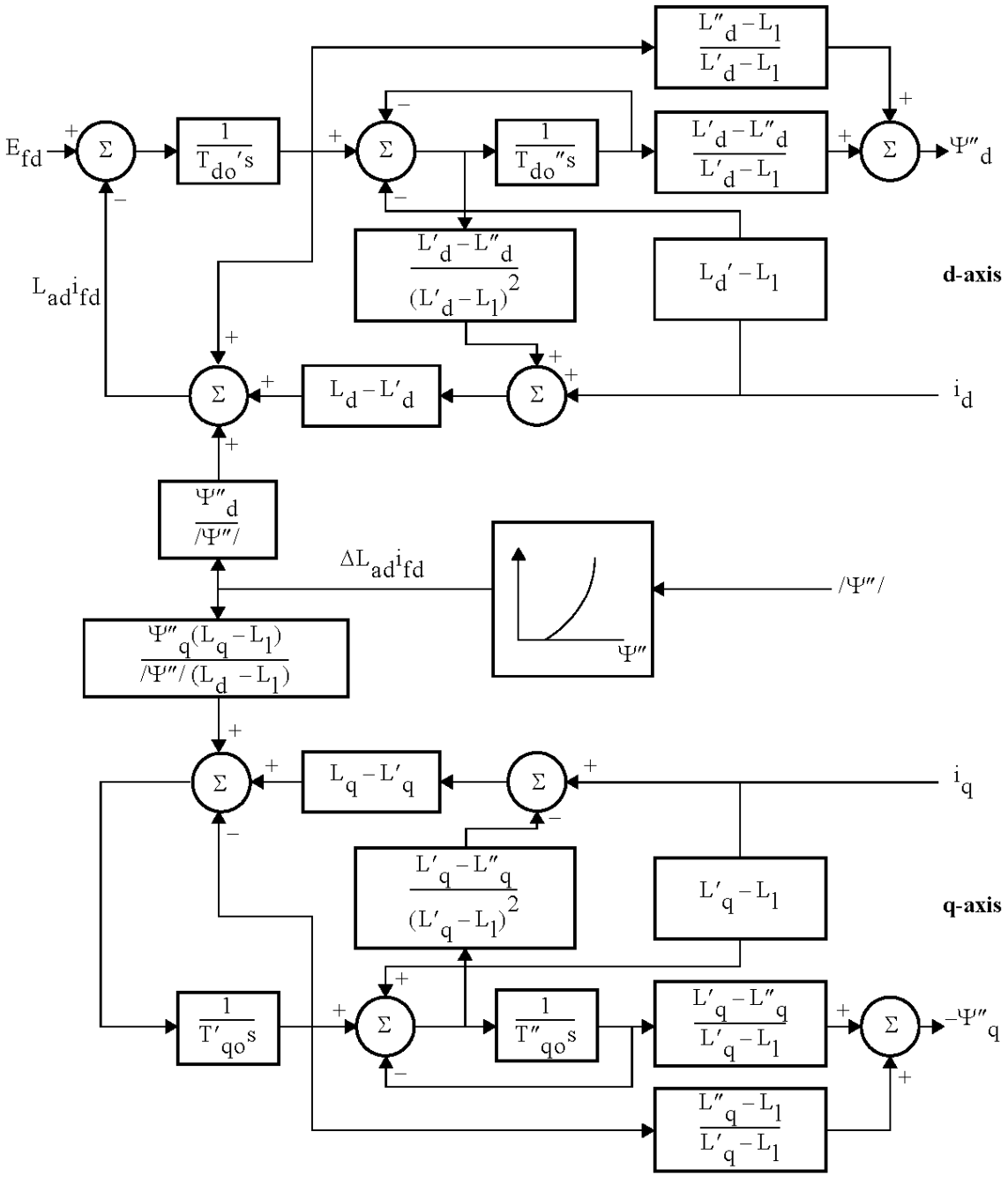

Figure 30: Block Diagram for the PSS/E Model GENROE

3.1.2 Excitation Systems

The excitation systems are represented by a simple first order model, represented in PSS/E by the simplified excitation system model SCRX. The block diagram of the PSS/E model SCRX [2] is shown in Figure 31. The parameters for the model are presented in Table 11.

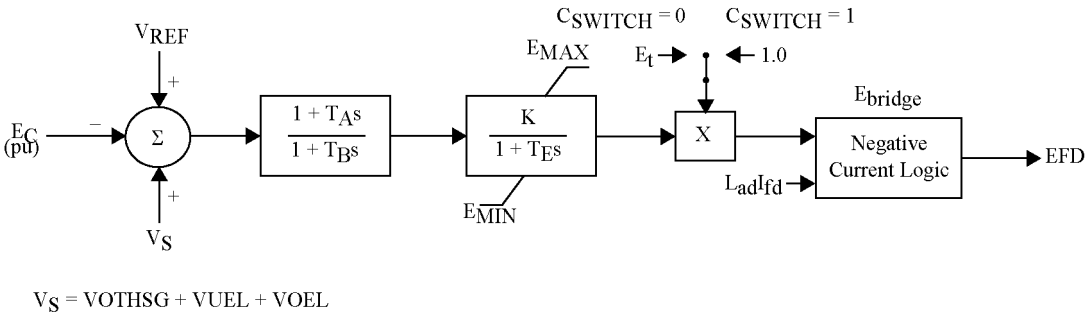

Figure 31: Block Diagram for the PSS/E Model SCRX

Table 11: Dynamic Model Data for the Excitation Systems (PSS/E Model SCRX)

PARAMETERS			
Description	**Symbol**	**Value**	**Unit**
transient gain reduction	T_A/T_B	1	s
TGR block 2 numerator time constant	T_B	1†	s
AVR steady state gain	K_A	100††	pu
AVR equivalent time constant	T_E	0.05	s
Min. AVR output	V_{Rmin}	–5	pu
Max. AVR output	V_{Rmax}	5	pu
excitation power supply option	C_{SWITCH}	1†††	
negative field capability	r_C/r_{fd}	0††††	–

Notes:

† Transient gain reduction is not used, so T_A=T_B=1

†† Generators 1 and 2 have K_A=100, while Generator 3 has K_A = 150.

††† The parameter "C_{SWITCH}" is specific to the PSS/E implementation of this model and determines if the excitation system is bus-fed (C_{SWITCH}=0) or independently fed (C_{SWITCH}=1). The excitation systems are represented as independently fed.

†††† The excitation system is represented with negative field current capability.

3.1.3 Power System Stabilizers

The IEEE Std. 421.5(2005) model PSS1A [3] will be used to represent the power system stabilizers. The block diagram of the PSS/E model IEEEST [2] is shown in Figure 32. The parameters for the IEEEST model are presented in Table 12.

The output limits were set to +/– 5%, while the logic to switch off the PSS for voltages outside a normal operation range has been ignored (parameters V_{CU} and V_{CL} set to zero).

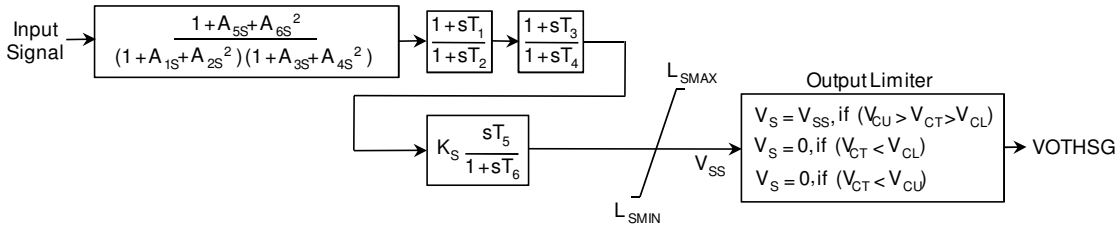

Figure 32: Power System Stabilizer (PSS/E Model IEEEST).

Table 12: Dynamic Model Data for Power System Stabilizers (PSS/E Model IEEEST)

PARAMETERS			
Description	**Symbol**	**Value**	**Unit**
2nd order denominator coefficient	A_1	0.641	
2nd order denominator coefficient	A_2	0	
2nd order numerator coefficient	A_3	0	
2nd order numerator coefficient	A_4	0	
2nd order denominator coefficient	A_5	0.158	
2nd order denominator coefficient	A_6	0	
1st lead-lag numerator time constant	T_1	0.142	s
1st lead-lag denominator time constant	T_2	0.014	s
2nd lead-lag numerator time constant	T_3	0.142	s
2nd lead-lag denominator time constant	T_4	0.014	s
Washout block numerator time constant	T_5	3	s
Washout block denominator time constant	T_6	3	s
PSS gain	K_S	35	pu
PSS max. output	L_{Smax}	0.05	pu
PSS min. output	L_{Smin}	–0.05	pu
Upper voltage limit for PSS operation	V_{CU}	0	pu
Lower voltage limit for PSS operation	V_{CL}	0	pu

3.2 Time domain simulations

3.2 a) 50 MVAr Reactor at Bus #5

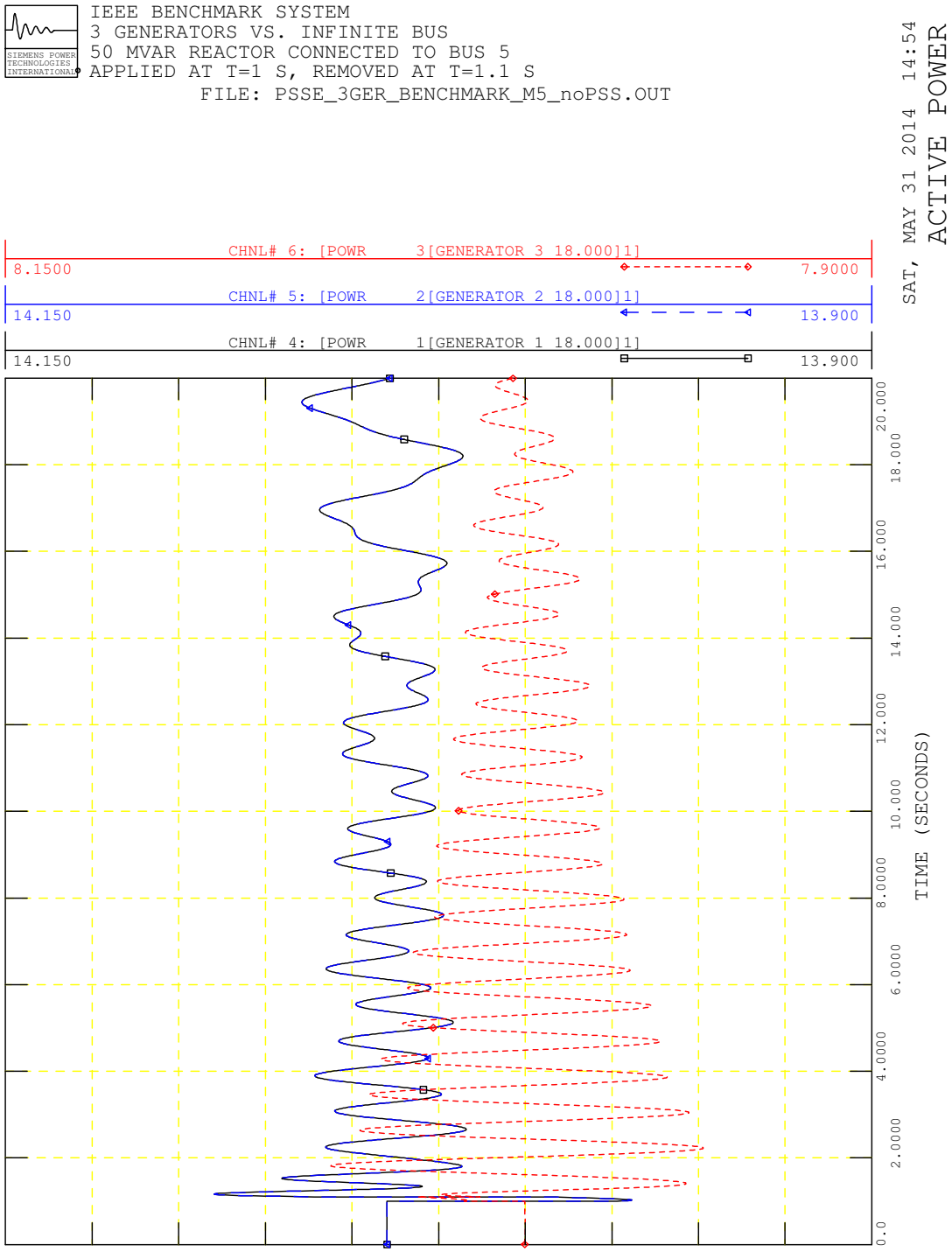

Figure 33: Electrical Power Output, no PSS

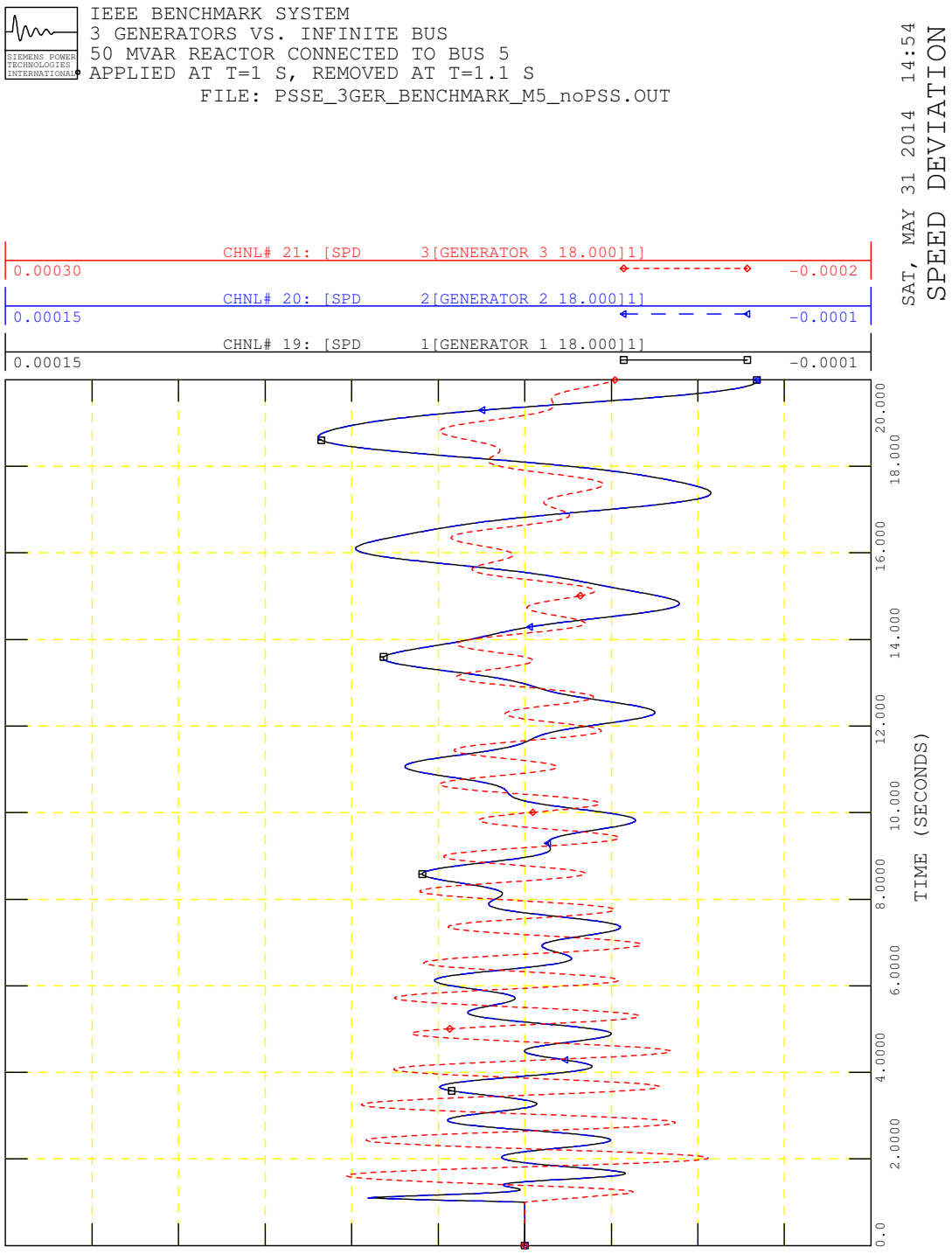

Figure 34: Rotor Speed Deviation, no PSS

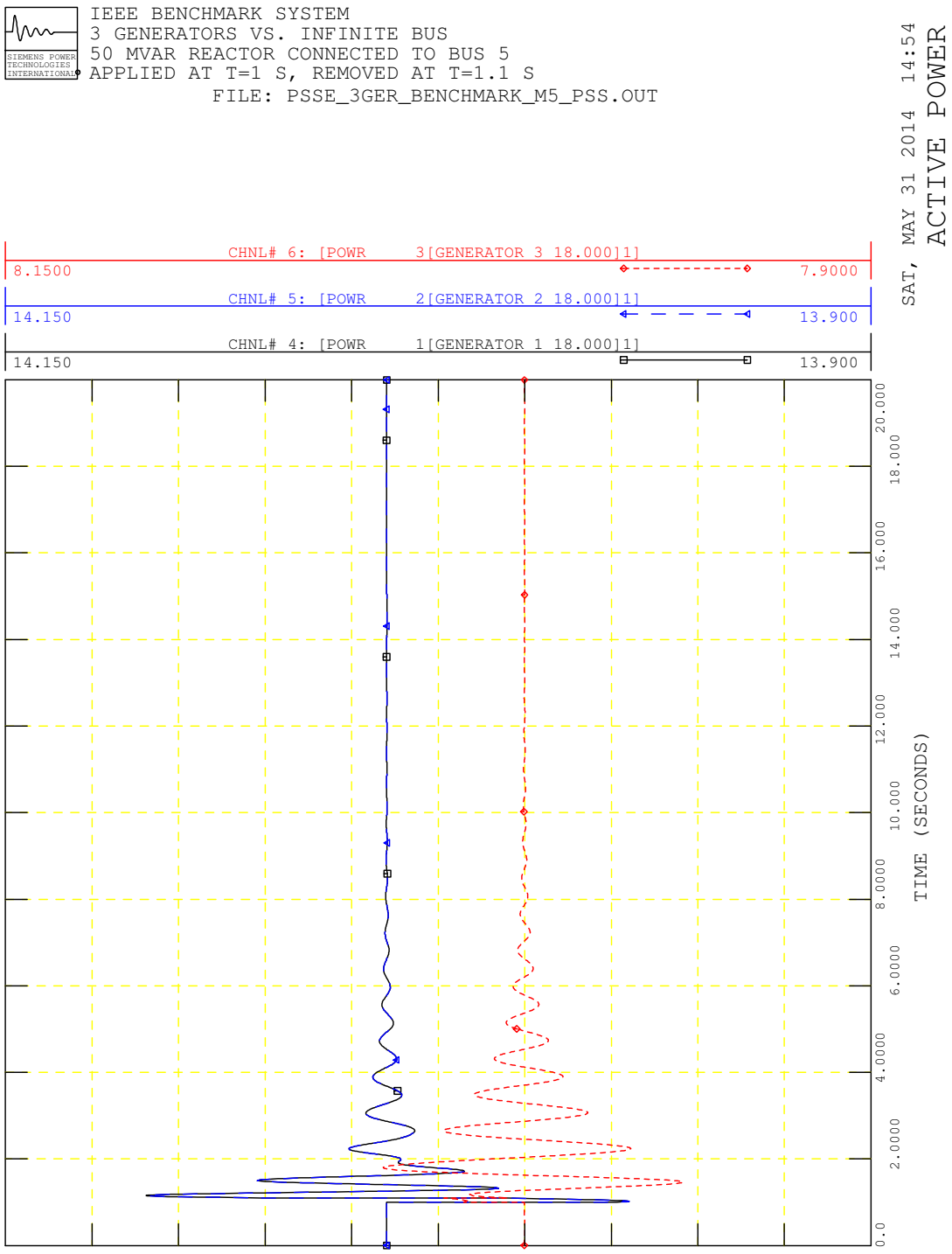

Figure 35: Electrical Power Output, with PSS

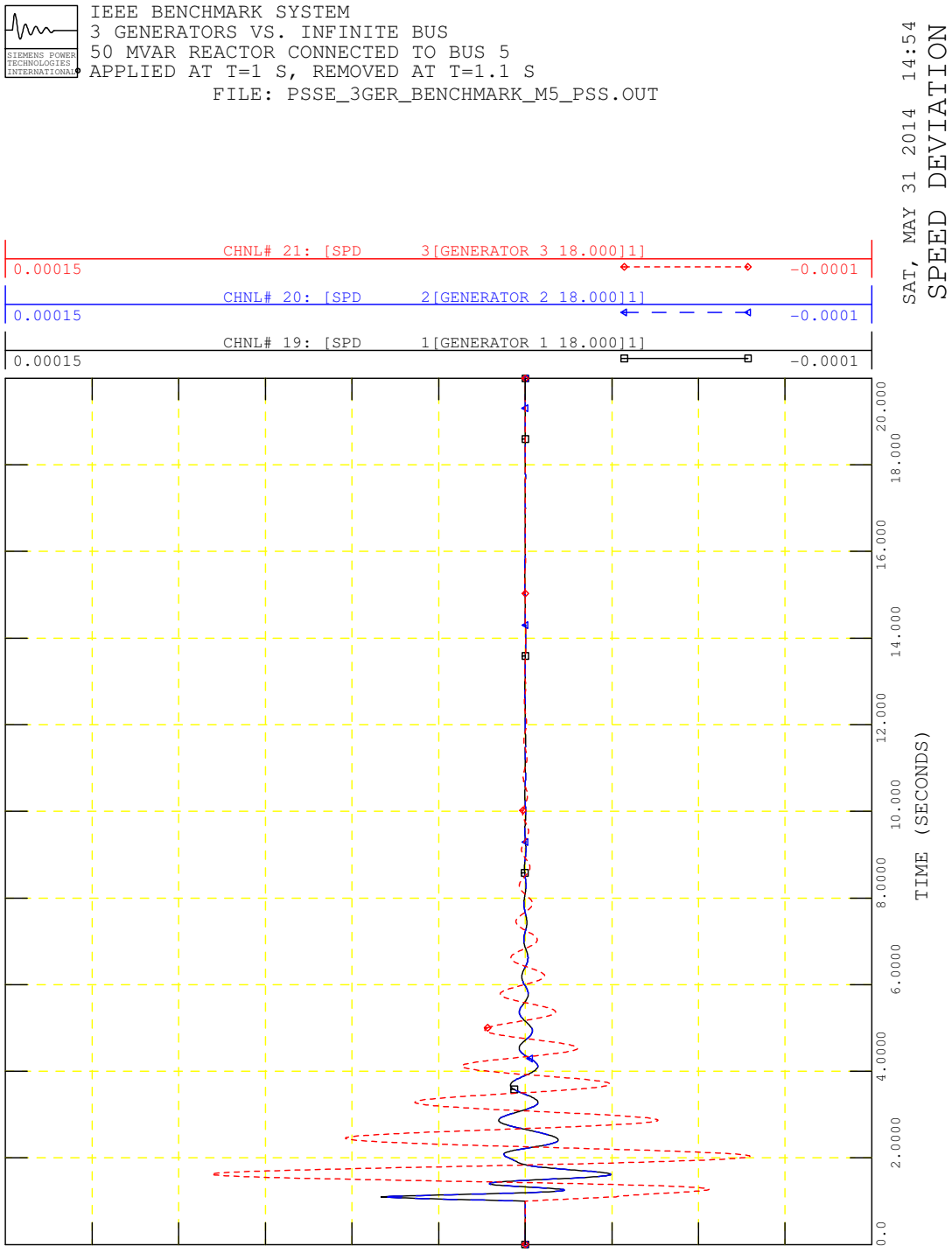

Figure 36: Rotor Speed Deviation, with PSS

3.2. b) Steps in Voltage Reference

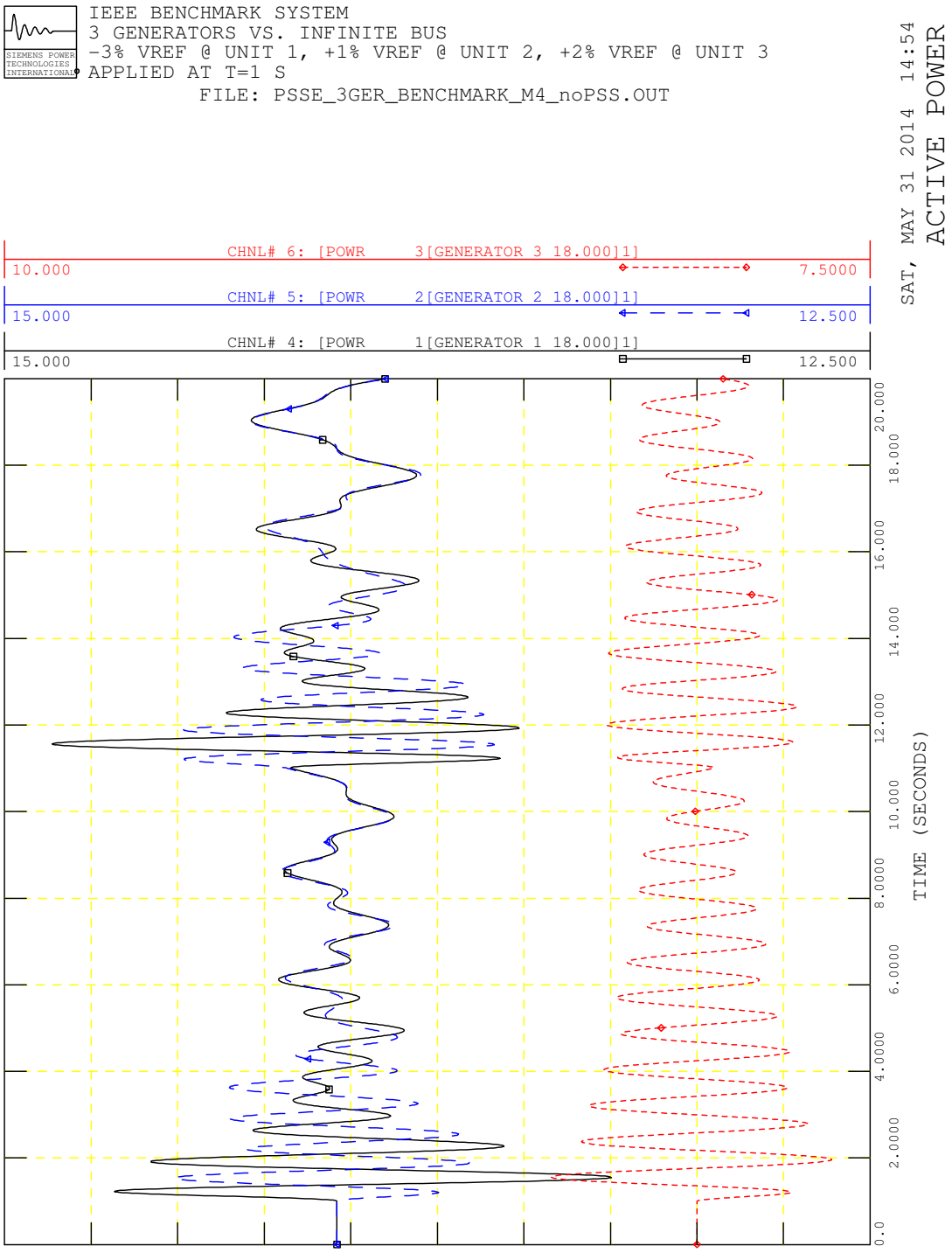

Figure 37: Electrical Power Output, no PSS

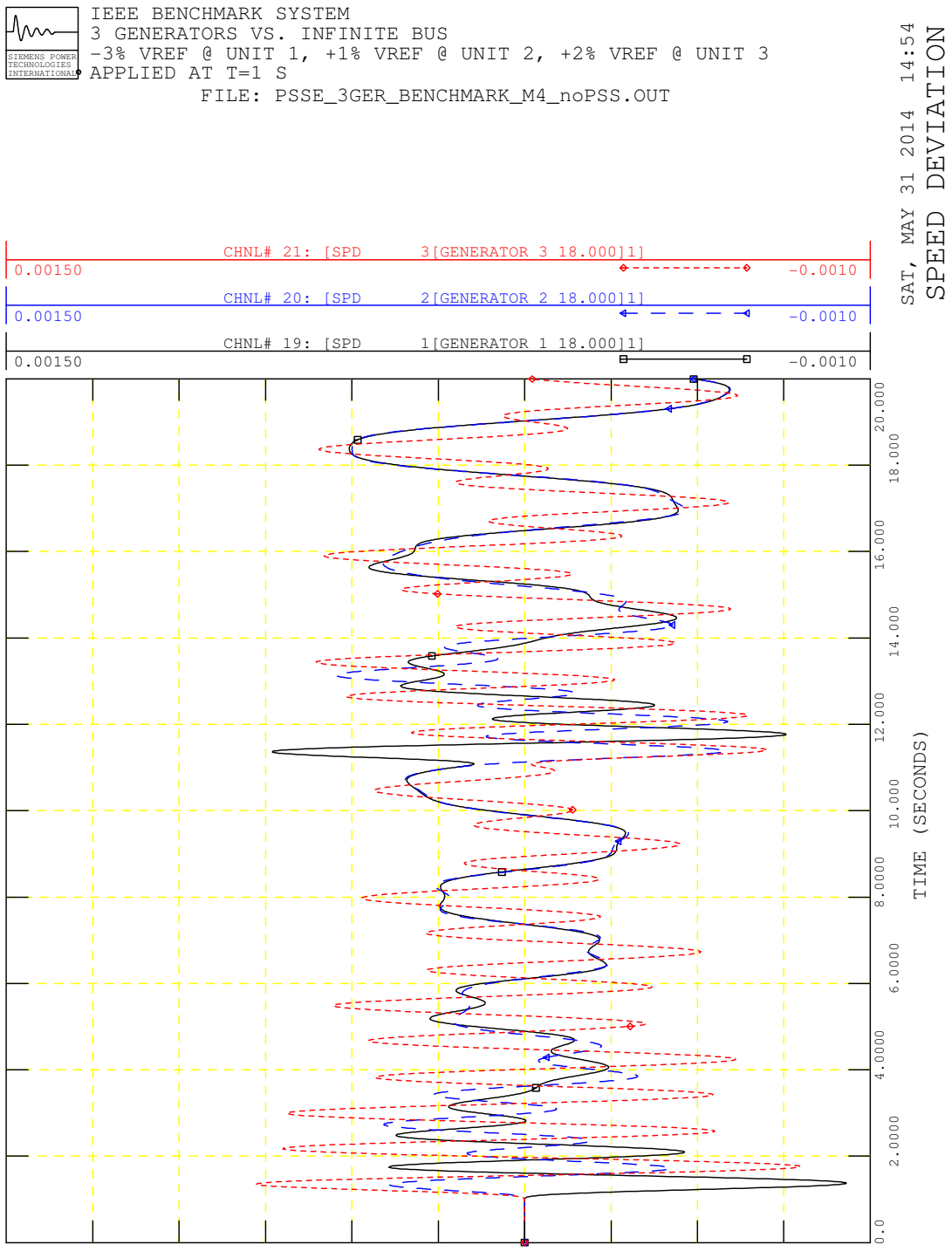

Figure 38: Rotor Speed Deviation, no PSS

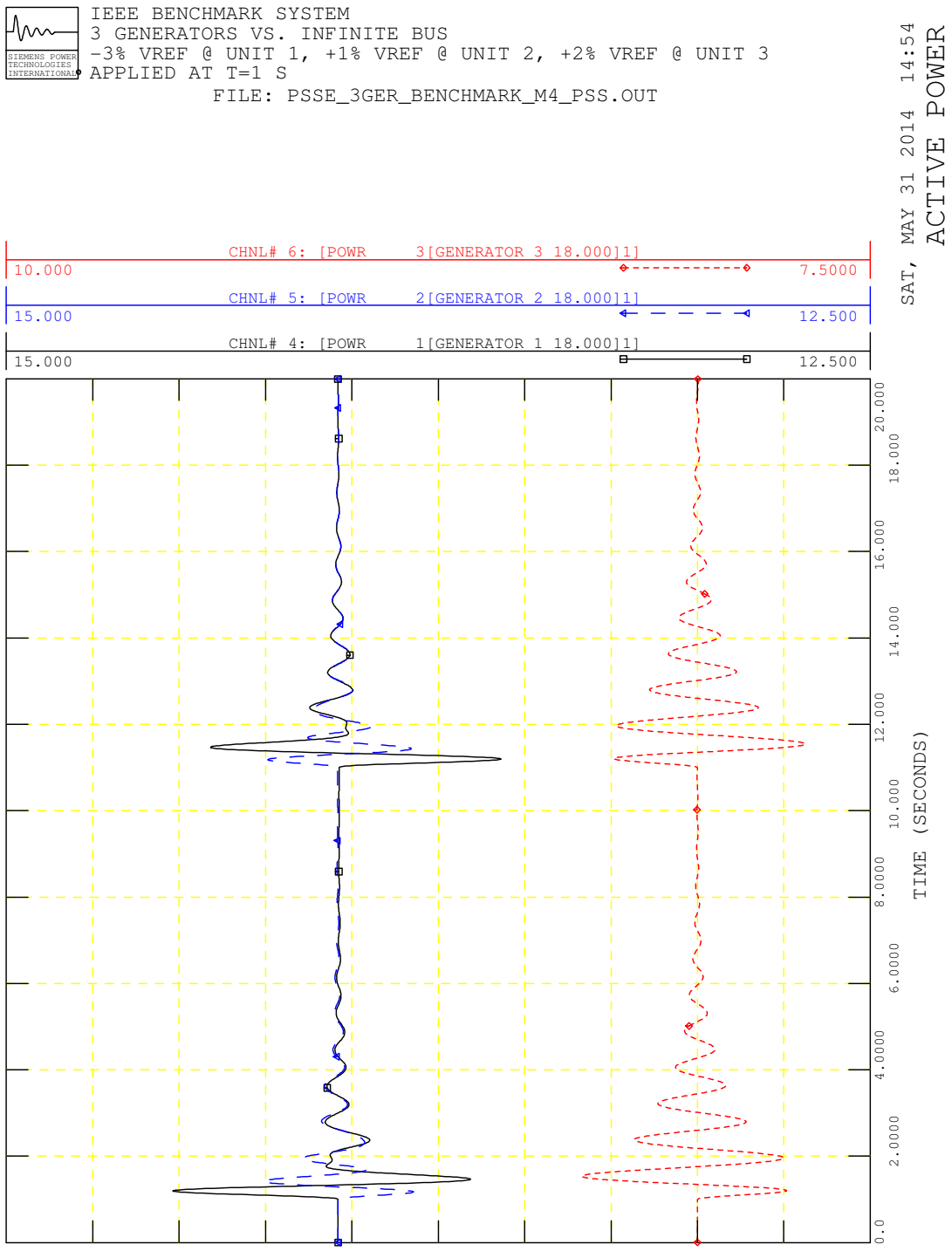

Figure 39: Electrical Power Output, with PSS

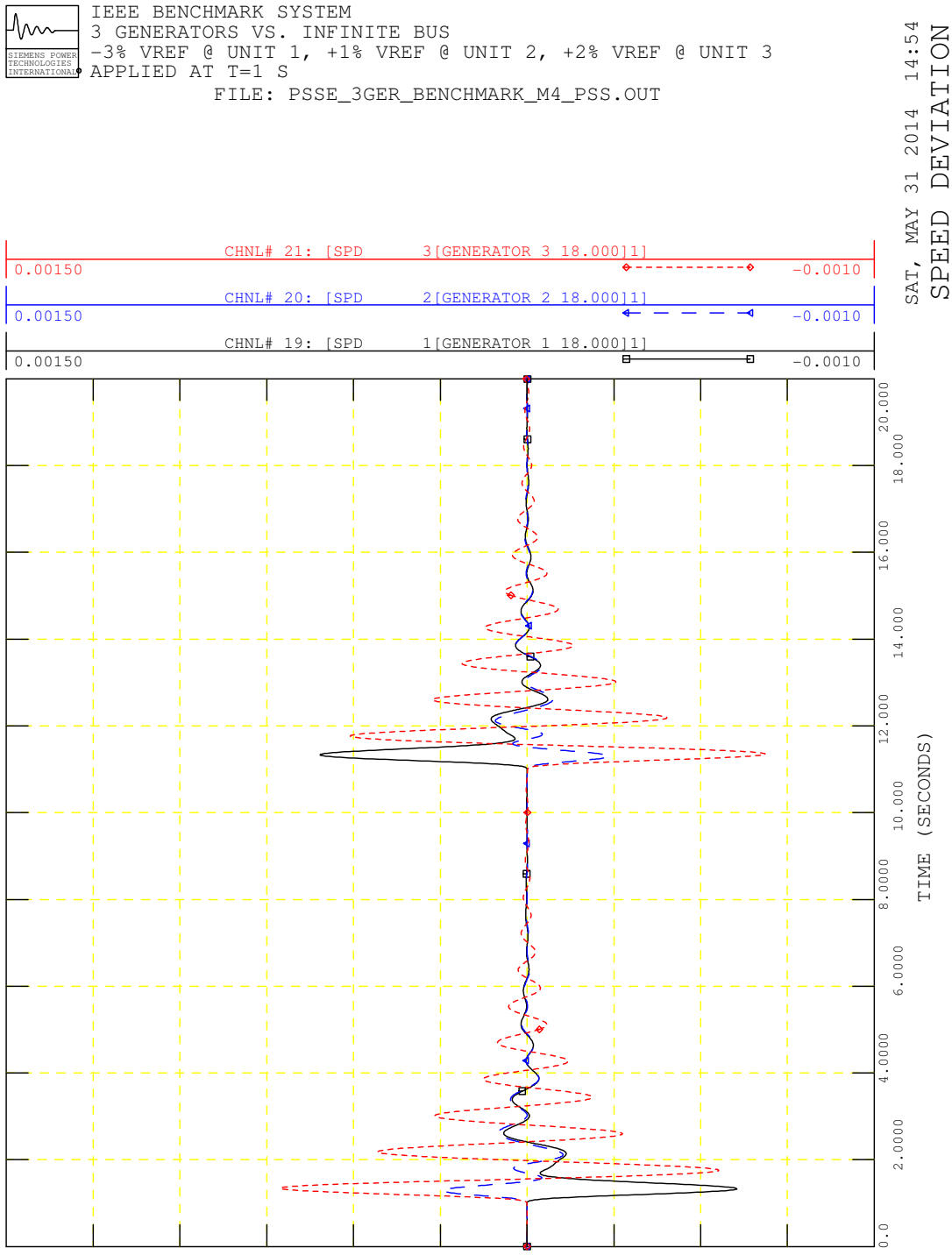

Figure 40: Rotor Speed Deviation, with PSS

3.3 Eigenanalysis without PSS

PSS/E can build a numerical approximation for the linearized system model. This approximation is obtained by numerical disturbances applied to the states of the nonlinear model, so the resulting precision of the numerical approximation is a function of the applied disturbance.

The results obtained with this tool might not be as accurate as the results obtained from linearized models built with analytical linearization techniques, so the results (eigenvalues and eigenvectors) presented in this section cannot be taken as an absolute (precise) reference. On the other hand, it would be an interesting exercise to compare these results with those obtained from analytical methods.

The PSS/E activity ASTR allows the definition of the disturbance to be used, and also the state variables and input/output variables that will be used in building a (linearized) state equation for modal analysis, as shown in Figure 41.

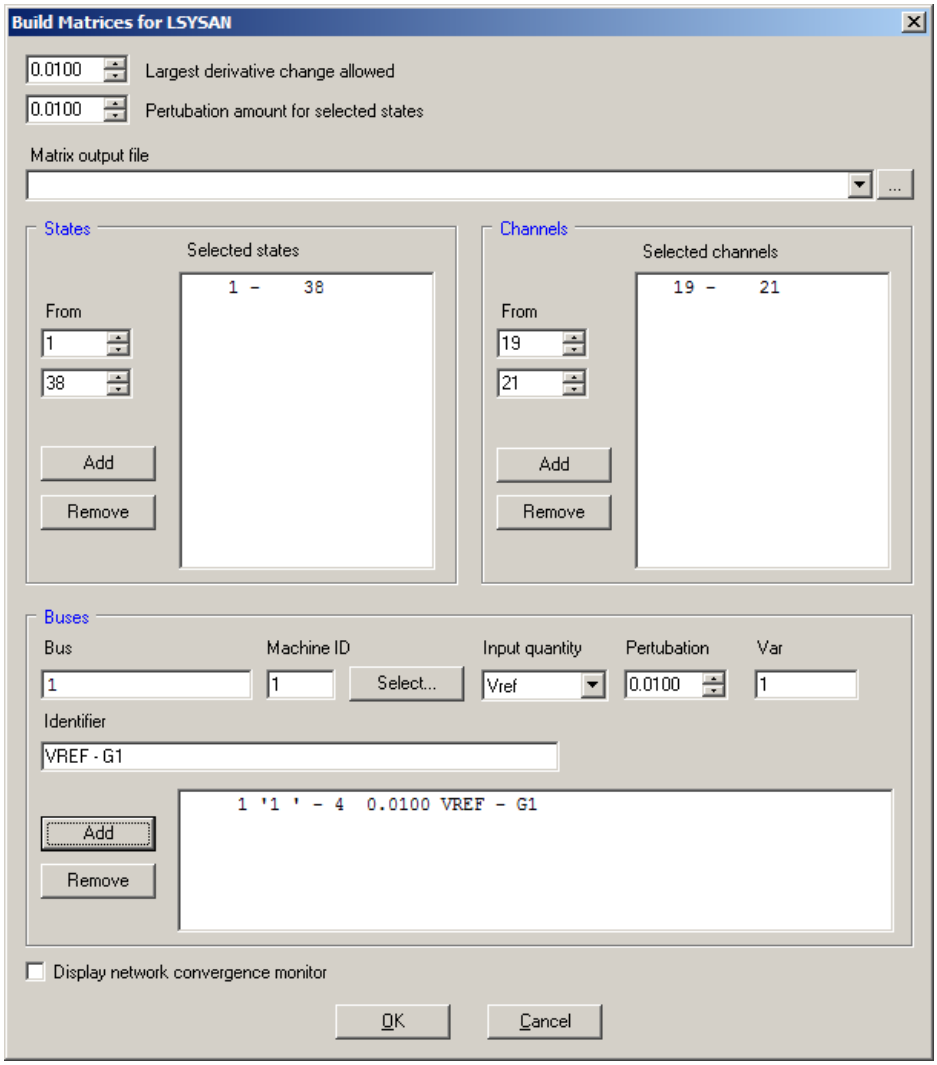

Figure 41: PSS/E Window for Activity ASTR (Linearized State Equation)

Once the linearized state equations have been numerically calculated, the auxiliary program LSYSAN[1] can be used for the modal analysis.

It should be noted that the PSS/E case without PSS has 22 states, corresponding to 5 states per GENSAE model and 6 for the GENROE model, plus 2 states per excitation system (SCRX model).

The program LSYSAN calculated the eigenvalues of a linearized system of order 22, as shown in **Erro! Fonte de referência não encontrada.**. The redundant state variables (not active due to the selected values for the parameters in the model, $T_A = T_B = 1$ s in the AVR model) are part of the state equations. Each of these redundant states will result in an eigenvalue equal to -1, as highlighted in Table 13.

Table 13: Eigenvalues Calculated with PSS/E Program LSYSAN

```
COMPLEX EIGENVALUES:

  NO.     REAL          IMAG          DAMP          FREQ
    1   -4.7953        15.894       0.28885        2.5296
    2   -4.7953       -15.894       0.28885        2.5296

    3   -6.2653        12.769       0.44049        2.0323
    4   -6.2653       -12.769       0.44049        2.0323

    5 -0.70133        9.0019       0.77673E-01    1.4327
    6 -0.70133       -9.0019       0.77673E-01    1.4327

    7 -0.14197        7.6758       0.18493E-01    1.2216
    8 -0.14197       -7.6758       0.18493E-01    1.2216

    9   -7.4671        4.2989       0.86664       0.68418
   10   -7.4671       -4.2989       0.86664       0.68418

   11   0.86532E-01    2.5306      -0.34174E-01   0.40276
   12   0.86532E-01   -2.5306      -0.34174E-01   0.40276

EIGENVALUES:

  NO.     REAL      TIME CONSTANT
   13   -32.391      0.30872E-01
   14   -30.426      0.32867E-01
   15   -27.427      0.36460E-01
   16   -26.125      0.38278E-01
   17   -19.698      0.50768E-01
   18   -14.274      0.70057E-01
   19   -3.4236      0.29209
   20   -1.0000        1.0000
   21   -1.0000        1.0000
   22   -1.0000        1.0000
```

[1] Provided as part of the PSS/E installation, for users with the proper license. Consult the software vendor if you are not sure about your license.

Table 14 presents the eigenvector associated with mode #5 in Table 13. The components of the eigenvector associated with the rotor speed deviation of the generators (state K+4 of the model GENSAE and state K+5 of the model GENROE) are highlighted. It can be seen that this mode is related with machine 1 oscillating in phase opposition to machines 2 and 3. Moreover, the relative magnitudes of these eigenvector components indicate that this mode corresponds (mostly) to the oscillation between machines 1 and 2. The fact that this mode is an oscillation between machines 1 and 2 becomes obvious when looking at the relative participation factors for this mode, shown in Table 15.

Table 14: Eigenvector Calculated with PSS/E Program LSYSAN for Mode #5

```
EIGENVALUE      5: REAL=  -0.70133      IMAG=    9.0019
                   DAMP=   0.77673E-01 FREQ=    1.4327

  ROW  X--- VECTOR  ELEMENT ---X  STATE  MODEL     BUS  X----- NAME -----X   ID
        MAGNITUDE      PHASE
    1   0.19154E-01  -86.924       K    GENSAE       1  GENERATOR 1 18.000   1
    2   0.77123E-01  -26.089       K+1  GENSAE       1  GENERATOR 1 18.000   1
    3   0.20254E-01  -162.79       K+2  GENSAE       1  GENERATOR 1 18.000   1
    4   0.47436E-02   90.541       K+3  GENSAE       1  GENERATOR 1 18.000   1
    5   0.19806      -3.9137       K+4  GENSAE       1  GENERATOR 1 18.000   1
    6   0.19032E-01   92.669       K    GENSAE       2  GENERATOR 2 18.000   1
    7   0.77128E-01   153.89       K+1  GENSAE       2  GENERATOR 2 18.000   1
    8   0.20255E-01   16.802       K+2  GENSAE       2  GENERATOR 2 18.000   1
    9   0.47426E-02  -89.453       K+3  GENSAE       2  GENERATOR 2 18.000   1
   10   0.19802       176.09       K+4  GENSAE       2  GENERATOR 2 18.000   1
   11   0.19600E-03  -95.578       K    GENROE       3  GENERATOR 3 18.000   1
   12   0.91708E-04   6.7728       K+1  GENROE       3  GENERATOR 3 18.000   1
   13   0.14087E-03  -113.89       K+2  GENROE       3  GENERATOR 3 18.000   1
   14   0.99082E-04   98.994       K+3  GENROE       3  GENERATOR 3 18.000   1
   15   0.61246E-05  -106.60       K+4  GENROE       3  GENERATOR 3 18.000   1
   16   0.25556E-03   158.99       K+5  GENROE       3  GENERATOR 3 18.000   1
   17    0.0000       0.0000       K    SCRX         1  GENERATOR 1 18.000   1
   18    1.0000       0.0000       K+1  SCRX         1  GENERATOR 1 18.000   1
   19    0.0000       0.0000       K    SCRX         2  GENERATOR 2 18.000   1
   20   0.99442       179.61       K+1  SCRX         2  GENERATOR 2 18.000   1
   21    0.0000       0.0000       K    SCRX         3  GENERATOR 3 18.000   1
   22   0.91674E-02  -18.847       K+1  SCRX         3  GENERATOR 3 18.000   1
```

Table 15: Relative Participation Factors Calculated with PSS/E Program LSYSAN for Mode #5

```
NORMALIZED PARTICIPATION FACTORS FOR MODE     5: -0.70133       9.0019

 FACTOR   ROW  STATE  MODEL     BUS  X-- NAME --X  ID
1.00000     4    K+3  GENSAE              1  GENERATOR 1 18.000  1
0.99979     9    K+3  GENSAE              2  GENERATOR 2 18.000  1
0.99921     5    K+4  GENSAE              1  GENERATOR 1 18.000  1
0.99900    10    K+4  GENSAE              2  GENERATOR 2 18.000  1
0.16612     7    K+1  GENSAE              2  GENERATOR 2 18.000  1
0.16609     2    K+1  GENSAE              1  GENERATOR 1 18.000  1
0.06847     1    K    GENSAE              1  GENERATOR 1 18.000  1
0.06803     6    K    GENSAE              2  GENERATOR 2 18.000  1
0.03446     8    K+2  GENSAE              2  GENERATOR 2 18.000  1
0.03446     3    K+2  GENSAE              1  GENERATOR 1 18.000  1
0.03291    18    K+1  SCRX                1  GENERATOR 1 18.000  1
0.03273    20    K+1  SCRX                2  GENERATOR 2 18.000  1
0.00000    16    K+5  GENROE              3  GENERATOR 3 18.000  1
0.00000    15    K+4  GENROE              3  GENERATOR 3 18.000  1
0.00000    11    K    GENROE              3  GENERATOR 3 18.000  1
0.00000    22    K+1  SCRX                3  GENERATOR 3 18.000  1
0.00000    14    K+3  GENROE              3  GENERATOR 3 18.000  1
0.00000    12    K+1  GENROE              3  GENERATOR 3 18.000  1
0.00000    13    K+2  GENROE              3  GENERATOR 3 18.000  1
0.00000    21    K    SCRX                3  GENERATOR 3 18.000  1
0.00000    19    K    SCRX                2  GENERATOR 2 18.000  1
0.00000    17    K    SCRX                1  GENERATOR 1 18.000  1
```

Table 16 presents the eigenvector associated with mode #7 in Table 13. The components of the eigenvector associated with the rotor speed deviation of the generators (state K+4 of the model GENSAE and state K+5 of the model GENROE) are highlighted. It can be seen that this mode is related with machine 3 oscillating in phase opposition to machines 1 and 2, as clearly shown by the participation factors in Table 17.

Table 16: Eigenvector Calculated with PSS/E Program LSYSAN for Mode #7

```
EIGENVALUE      7: REAL=  -0.14197      IMAG=    7.6758
                   DAMP=   0.18493E-01 FREQ=    1.2216

  ROW  X--- VECTOR  ELEMENT ---X  STATE  MODEL     BUS  X----- NAME -----X   ID
        MAGNITUDE      PHASE
    1   0.24416E-01  -85.124        K    GENSAE      1  GENERATOR 1 18.000   1
    2   0.42759E-02  -81.385        K+1  GENSAE      1  GENERATOR 1 18.000   1
    3   0.17873E-01  -113.77        K+2  GENSAE      1  GENERATOR 1 18.000   1
    4   0.71755E-03   11.121        K+3  GENSAE      1  GENERATOR 1 18.000   1
    5   0.35236E-01  -79.939        K+4  GENSAE      1  GENERATOR 1 18.000   1
    6   0.24415E-01  -85.124        K    GENSAE      2  GENERATOR 2 18.000   1
    7   0.42765E-02  -81.391        K+1  GENSAE      2  GENERATOR 2 18.000   1
    8   0.17873E-01  -113.77        K+2  GENSAE      2  GENERATOR 2 18.000   1
    9   0.71758E-03   11.119        K+3  GENSAE      2  GENERATOR 2 18.000   1
   10   0.35238E-01  -79.940        K+4  GENSAE      2  GENERATOR 2 18.000   1
   11   0.95038E-02   9.7872        K    GENROE      3  GENERATOR 3 18.000   1
   12   0.90293E-02   69.134        K+1  GENROE      3  GENERATOR 3 18.000   1
   13   0.25958E-01  -79.775        K+2  GENROE      3  GENERATOR 3 18.000   1
   14   0.67084E-01   89.777        K+3  GENROE      3  GENERATOR 3 18.000   1
   15   0.37730E-02  -157.88        K+4  GENROE      3  GENERATOR 3 18.000   1
   16   0.18528       111.06        K+5  GENROE      3  GENERATOR 3 18.000   1
   17    0.0000       0.0000        K    SCRX        1  GENERATOR 1 18.000   1
   18    1.0000       0.0000        K+1  SCRX        1  GENERATOR 1 18.000   1
   19    0.0000       0.0000        K    SCRX        2  GENERATOR 2 18.000   1
   20   0.99999      0.13213E-03    K+1  SCRX        2  GENERATOR 2 18.000   1
   21    0.0000       0.0000        K    SCRX        3  GENERATOR 3 18.000   1
   22   0.47152       83.389        K+1  SCRX        3  GENERATOR 3 18.000   1
```

Table 17: Relative Participation Factors Calculated with PSS/E Program LSYSAN for Mode #7

```
NORMALIZED PARTICIPATION FACTORS FOR MODE     7: -0.14197       7.6758

 FACTOR   ROW  STATE  MODEL     BUS  X-- NAME --X  ID
1.00000    15    K+4  GENROE              3  GENERATOR 3 18.000  1
0.99986    16    K+5  GENROE              3  GENERATOR 3 18.000  1
0.08897    14    K+3  GENROE              3  GENERATOR 3 18.000  1
0.07025     9    K+3  GENSAE              2  GENERATOR 2 18.000  1
0.07023    10    K+4  GENSAE              2  GENERATOR 2 18.000  1
0.06996     4    K+3  GENSAE              1  GENERATOR 1 18.000  1
0.06994     5    K+4  GENSAE              1  GENERATOR 1 18.000  1
0.05310     1    K    GENSAE              1  GENERATOR 1 18.000  1
0.05290     6    K    GENSAE              2  GENERATOR 2 18.000  1
0.02672    12    K+1  GENROE              3  GENERATOR 3 18.000  1
0.02117    11    K    GENROE              3  GENERATOR 3 18.000  1
0.01991    18    K+1  SCRX                1  GENERATOR 1 18.000  1
0.01984    20    K+1  SCRX                2  GENERATOR 2 18.000  1
0.01597     8    K+2  GENSAE              2  GENERATOR 2 18.000  1
0.01591     3    K+2  GENSAE              1  GENERATOR 1 18.000  1
0.01464    13    K+2  GENROE              3  GENERATOR 3 18.000  1
0.00933    22    K+1  SCRX                3  GENERATOR 3 18.000  1
0.00348     7    K+1  GENSAE              2  GENERATOR 2 18.000  1
0.00347     2    K+1  GENSAE              1  GENERATOR 1 18.000  1
0.00000    21    K    SCRX                3  GENERATOR 3 18.000  1
0.00000    19    K    SCRX                2  GENERATOR 2 18.000  1
0.00000    17    K    SCRX                1  GENERATOR 1 18.000  1
```

Table 18 presents the eigenvector associated with mode #9 in Table 13. The components of the eigenvector associated with the rotor speed deviation of the generators (state K+4 of the model GENSAE and state K+5 of the model GENROE) are highlighted. It can be seen that this mode is the inter-area mode, with machines 1, 2 and 3 oscillating against the infinite bus. Considering the relative magnitudes of these eigenvector components, the inter-area mode is somewhat more observable in the generators 1 and 2. The relative participation factors in Table 19 show that all three units participate in this oscillation mode, with slightly more observability and controllability on the units 1 and 2.

Table 18: Eigenvector Calculated with PSS/E Program LSYSAN for Mode #9

```
EIGENVALUE    11: REAL=   0.86532E-01 IMAG=    2.5306
                  DAMP=  -0.34174E-01 FREQ=   0.40276

  ROW  X--- VECTOR  ELEMENT ---X  STATE  MODEL     BUS  X----- NAME -----X   ID
       MAGNITUDE      PHASE
    1   0.18365E-01  -35.097       K    GENSAE       1  GENERATOR 1 18.000   1
    2   0.14974E-02  -51.231       K+1  GENSAE       1  GENERATOR 1 18.000   1
    3   0.13507E-01  -44.409       K+2  GENSAE       1  GENERATOR 1 18.000   1
    4   0.15289E-02   55.252       K+3  GENSAE       1  GENERATOR 1 18.000   1
    5   0.22763      -32.789       K+4  GENSAE       1  GENERATOR 1 18.000   1
    6   0.18365E-01  -35.097       K    GENSAE       2  GENERATOR 2 18.000   1
    7   0.14974E-02  -51.237       K+1  GENSAE       2  GENERATOR 2 18.000   1
    8   0.13506E-01  -44.409       K+2  GENSAE       2  GENERATOR 2 18.000   1
    9   0.15289E-02   55.252       K+3  GENSAE       2  GENERATOR 2 18.000   1
   10   0.22763      -32.789       K+4  GENSAE       2  GENERATOR 2 18.000   1
   11   0.50993E-01  -44.391       K    GENROE       3  GENERATOR 3 18.000   1
   12   0.40558E-01   101.37       K+1  GENROE       3  GENERATOR 3 18.000   1
   13   0.33485E-01  -60.465       K+2  GENROE       3  GENERATOR 3 18.000   1
   14   0.36271E-01   101.76       K+3  GENROE       3  GENERATOR 3 18.000   1
   15   0.92135E-03   66.407       K+4  GENROE       3  GENERATOR 3 18.000   1
   16   0.13717      -21.634       K+5  GENROE       3  GENERATOR 3 18.000   1
   17    0.0000       0.0000       K    SCRX         1  GENERATOR 1 18.000   1
   18   0.25933       37.246       K+1  SCRX         1  GENERATOR 1 18.000   1
   19    0.0000       0.0000       K    SCRX         2  GENERATOR 2 18.000   1
   20   0.25932       37.252       K+1  SCRX         2  GENERATOR 2 18.000   1
   21    0.0000       0.0000       K    SCRX         3  GENERATOR 3 18.000   1
   22    1.0000       0.0000       K+1  SCRX         3  GENERATOR 3 18.000   1
```

Table 19: Relative Participation Factors Calculated with PSS/E Program LSYSAN for Mode #9

```
NORMALIZED PARTICIPATION FACTORS FOR MODE    11:  0.86532E-01   2.5306

 FACTOR   ROW  STATE  MODEL     BUS  X-- NAME --X  ID
1.00000     5    K+4  GENSAE          1  GENERATOR 1 18.000  1
0.99965    10    K+4  GENSAE          2  GENERATOR 2 18.000  1
0.99787     4    K+3  GENSAE          1  GENERATOR 1 18.000  1
0.99752     9    K+3  GENSAE          2  GENERATOR 2 18.000  1
0.22289    16    K+5  GENROE          3  GENERATOR 3 18.000  1
0.22229    15    K+4  GENROE          3  GENERATOR 3 18.000  1
0.06706    12    K+1  GENROE          3  GENERATOR 3 18.000  1
0.05668    11    K    GENROE          3  GENERATOR 3 18.000  1
0.04935     6    K    GENSAE          2  GENERATOR 2 18.000  1
0.04856     1    K    GENSAE          1  GENERATOR 1 18.000  1
0.01049    22    K+1  SCRX            3  GENERATOR 3 18.000  1
0.00683    20    K+1  SCRX            2  GENERATOR 2 18.000  1
0.00679    14    K+3  GENROE          3  GENERATOR 3 18.000  1
0.00672    18    K+1  SCRX            1  GENERATOR 1 18.000  1
0.00556     3    K+2  GENSAE          1  GENERATOR 1 18.000  1
0.00553     8    K+2  GENSAE          2  GENERATOR 2 18.000  1
0.00371    13    K+2  GENROE          3  GENERATOR 3 18.000  1
0.00120     7    K+1  GENSAE          2  GENERATOR 2 18.000  1
0.00120     2    K+1  GENSAE          1  GENERATOR 1 18.000  1
0.00000    21    K    SCRX            3  GENERATOR 3 18.000  1
0.00000    19    K    SCRX            2  GENERATOR 2 18.000  1
0.00000    17    K    SCRX            1  GENERATOR 1 18.000  1
```

4. References

[1] CEPEL, “ANATEM Users Manual V10.04.06 (in Portuguese)”, March 2012.

[2] Siemens PTI, “PSS/E 32.0 Online Documentation”, June 2009.

[3] IEEE Recommended Practice for Excitation System Models for Power System Stability Studies, IEEE Standard 421.5(2005), April 2006.