IEEE PES Task Force on Benchmark Systems for Stability Controls

Report on the Three-Machine Infinite-Bus (3MIB) System

Version 2 - July 29th, 2013

Fernando J. De Marco and Nelson Martins

The 3-machine-infinite bus (3MIB) benchmark system has been proposed in [1] to assess the effectiveness of power system stabilizers to simultaneously contribute to the damping of electromechanical modes of different nature: from the intraplant to the interarea modes.

A well-designed PSS (assuming the generator is equipped with a fast excitation system) should be able to provide good to excellent intraplant and local mode damping under practically all operating conditions, as well as provide an adequate contribution to the damping of interarea modes. If a single unit (or power plant) is dominant in local oscillations, its well-designed PSS(s) will be effective in damping them. By contrast, the effort in damping an interarea mode should be shared amongst generators equipped with PSSs in proportion to their ratings.

This report describes the 3MIB system and presents an example in which a stabilizer in a single machine is able to simultaneously provide positive damping to the three electromechanical modes of the system. All calculations were carried out using the Anarede/PacDyn package from CEPEL, and all the system data is given in the Appendix in the format required by these programs.

1. System description

The 3MIB benchmark system shown in Fig. 1 is comprised of six buses and three generators. The system branches are represented as pure reactances (no resistance is considered). The synchronous machine models consider transient (field winding) and subtransient effects (damper windings) in d and q axes, and the equations describing their dynamics being those used in PSS/E and ANATEM for round-rotor generator, GENROU, models. Generators at buses #1 and #2 are identical units of a single power plant and their parameters are presented in Table 1, while generator at bus #3 has its parameters presented in Table 2. The three generators are equipped with linear, first-order excitation systems models with the following parameters:

- Generators #1 and #2: T_A = 0.05 s; K_A = 100 pu.
- Generator #3: T_A = 0.05 s; K_A = 150 pu.

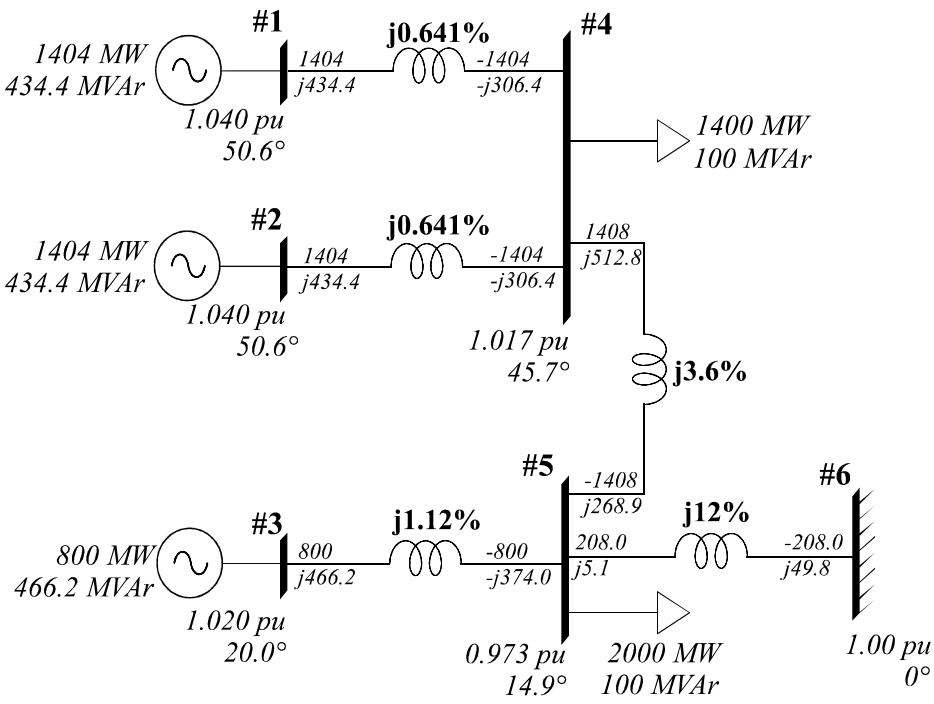

Fig. 1. 3-machine-infinite bus (3MIB) benchmark system. Reactances are given on 100 MVA base, while active and reactive power on each branch are specified in MW and MVAr, respectively.

Table 1: Data of the generators at buses #1 and #2.

S	f_n	X_d	X_q	X'_d	X'_q	X''_d
1,560MVA	60Hz	0.89pu	0.66pu	0.36pu	0.36pu	0.29pu
X''_q	X_l	R_a	H	T'_{do}	T''_{do}	T''_{qo}
0.29pu	0.28pu	0.0019pu	4.5s	5.1s	0.060s	0.094s

Table 2: Data of the generator at bus #3.

S	f_n	X_d	X_q	X'_d	X'_q	X''_d
890MVA	60Hz	1.72pu	1.68pu	0.49pu	0.80pu	0.34pu
X''_q	X_l	R_a	H	T'_{do}	T''_{do}	T''_{qo}
0.34pu	0.27pu	0.0pu	3.86s	5.3s	0.048s	0.066s

The models of the loads at buses #4 and #5 are described in Table 3. Using the constant-P and constant-I models for the loads prevents the PSS from promoting unrealistically high damping to the low-frequency interarea mode [1] through the modulation of a resistive load. The power flow solution for a base-case operating point is given both in Fig. 1 and in Table 4. Note that generator #3 is slightly overloaded, so the load flow for this operating point must be solved without considering the generator's reactive power limits.

Table 3: Load models for the 3-Machine-Infinite Bus System.

Bus	Active power	Reactive Power
4	80% constant-I 20% constant-Z	100% constant-Z
5	100% constant-P	100% constant-Z

Table 4: Results of the power flow calculation for the 3MIB system.

			Generator		Load	
Bus	**V[pu]**	**Angle[Deg]**	**P[MW]**	**Q[MVAR]**	**P[MW]**	**Q[MVAR]**
1	1.040	50.6	1404	434.4	0.0	0.0
2	1.040	50.6	1404	434.4	0.0	0.0
3	1.020	20.0	800	466.2	0.0	0.0
4	1.017	45.7	0.0	0.0	1400	100
5	0.973	14.9	0.0	0.0	2000	100
6	1.000	0.0	0.0	0.0	0.0	0.0

2. Eigenvalue calculation

The system poles (eigenvalues) and their transfer function residues are calculated using the software PacDyn. The system static and dynamic data is given in the Appendix in the format required by the ANAREDE and ANATEM softwares (recall that all ANATEM's required execution codes are recognized by PacDyn's version 9.4.2 and above).

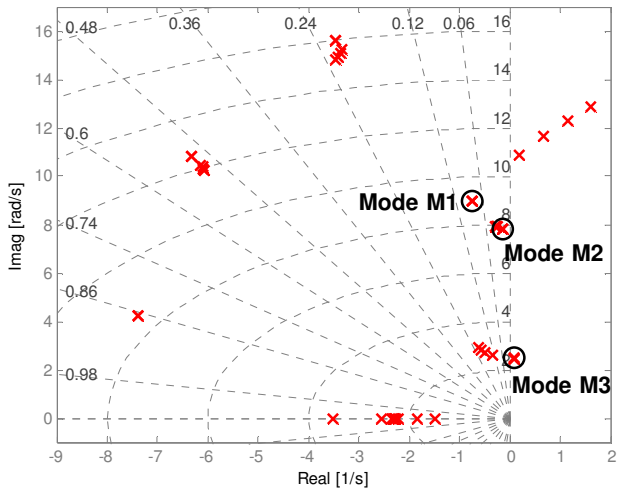

Fig. 2. Eigenvalues for the 3MIB system with PSS at generator #1 modeled as a single gain. The four root locus points, which are easily identified in the plot, were produced by increasing the gain values for this PSS.

Eigenvalue results for the 3MIB system are plotted in Fig. 2, for 4 PSS gain values with no phase compensation. Three electromechanical modes are clearly identified, their rotor-speed mode shapes being plotted in Fig. 3. These shapes allow the classification of the modes M1 (1.43 Hz), M2 (1.25 Hz) and M3 (0.39 Hz) into intraplant (between generators #1 and #2), interplant (generators #1 and #2 against generator #3), and interarea (the three generators oscillating coherently against the infinite bus), respectively. The eigenvalues associated with each electromechanical mode are listed in Table 5. The trajectories drawn by the poles for the 4 values of PSS gain (see Fig. 2) constitute the initial parts of the root-locus branches for these 3 electromechanical modes.

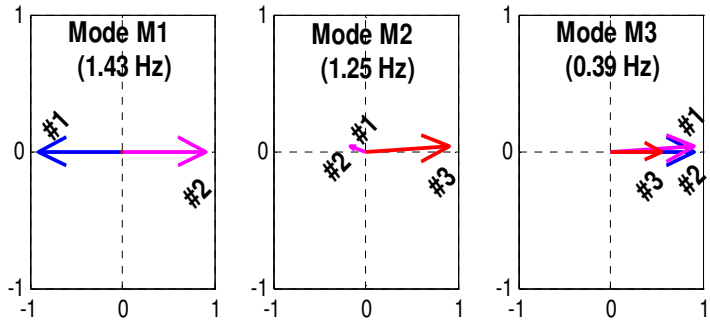

Fig. 3. Rotor-speed mode shapes, with generators being identified by their terminal buses. These shapes allow determining the nature of these modes.

Table 4: Electromechanical modes of the 3MIB system without PSS.

Mode	Eigenvalue
M1	-0.7567 ± j8.9905
M2	-0.1309 ± j7.8394
M3	-0.08087 ± j2.4745

Fig. 4 shows, as red arrows, the residues for the generator #1 ($\Delta\omega/\Delta V_{ref}$) transfer function residues for the 3 poles of interest, each pole associated with an electromechanical mode of a different nature. The PSS, which is now added to generator #1, has the following transfer function:

$$GPSS(s) = \frac{1+0.142s}{1+0.014s} \cdot \frac{1+0.142s}{1+0.014s} \cdot \frac{1+0.158s}{1+0.641s} \cdot \frac{3s}{1+3s}$$

After the addition of $GPSS(s)$ to generator #1, the residues for the transfer function ($\Delta PSS_{output}/\Delta V_{ref}$), associated with each one of the three electromechanical poles, are plotted as blue arrows in Fig. 4. These residues define the departure angles of the root-locus for gain changes in the $GPSS(s)$ stabilizer loop. Table 6 shows the sensitivity angles of the electromechanical modes for the cases with and without PSS phase compensation in the ($\Delta\omega/\Delta Vref$) feedback loop in generator #1. Fig. 5 shows the electromechanical poles of the system being shifted to locations having higher damping levels as the $GPSS(s)$ functions, which were added to both generating units at buses #1 and #2, have their gains raised from 0 to 35 pu in five equally spaced intervals. It is seen that positive damping is provided to the three electromechanical poles, the two lower frequency ones moving horizontally but the intraplant pole moving upwards a little, as correctly anticipated from the blue arrow residues in Fig 4. It is worth mentioning that a stabilizer added to the generator at bus #3 would be more effective in damping the interplant oscillations (mode M2).

3. Conclusions

The feature to highlight in the 3MIB system is the challenge of adjusting a PSS to provide damping for the intra-plant, inter-plant and inter-area mode simultaneously. The system parameters and operating point shall be varied in order to assess the robustness of the proposed PSS tuning. Furthermore, this system allows to investigate different damping strategies through excitation control that provide positive damping to oscillations the entire electromechanical range of frequencies.

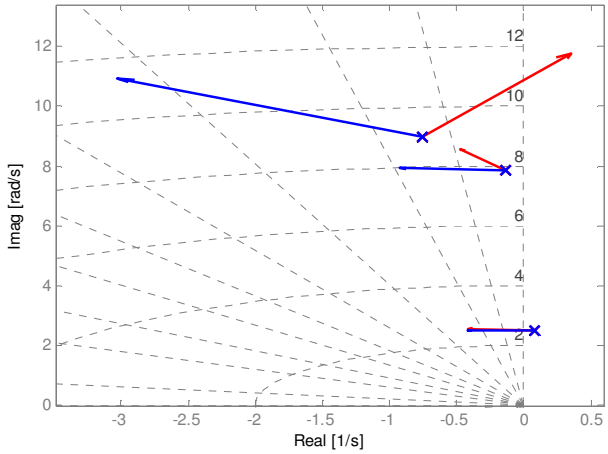

Fig. 4. Electromechanical modes and their residues of the ($\Delta\omega/\Delta V_{ref}$) transfer function of generator #1 calculated with (blue) and without (red) phase compensation.

Table 6: Sensitivity angles of the electromechanical modes with and without PSS phase compensation in the ($\Delta\omega/\Delta V_{ref}$) feedback loop in generator #1.

Mode	Sensitivity angles	
	Without phase compensation	**With phase compensation**
M1	68.35°	139.37°
M2	115.16°	174.24°
M3	171.19°	177.83°

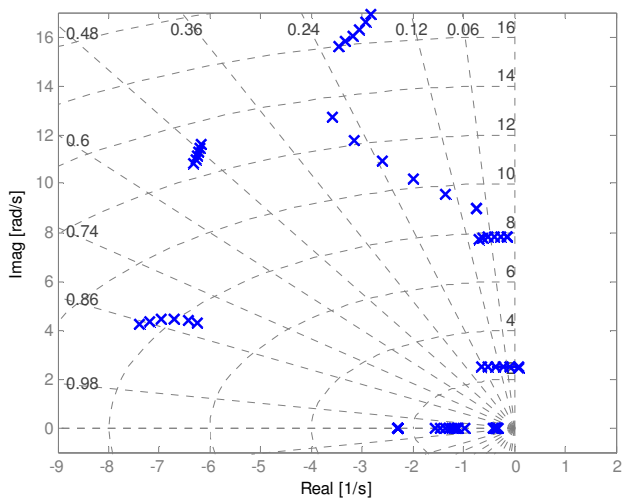

Fig. 5. 3MIB system eigenvalues with *GPSS*(*s*) at generators #1 and #2, whose gains are simultaneously varied to produce root loci plots.

Appendix

1. Load flow data

The input data necessary for the correct initialization of the ANAREDE software is presented below.

```
TITU

DBAR
(Num)OETGb(   nome   )Gl( V)( A)( Pg)( Qg)( Qn)( Qm)(Bc  )( Pl)( Ql)( Sh)Are(Vf)M(1)(2)(3)(4)(5)(6)
    1 L1  GEN 1         104050.61404.434.4   0.   0.                       11000
    2 L1  GEN 2         104050.61404.434.4   0.   0.                       11000
    3 L1  GEN 3         1020 20. 800.466.3-100.1000.                        11000
    4 L   TRAFO         101745.7                                            11000
    5 L                 113214.9                          2000. 100.        11000
    6 L2  INFINITE      1000  0.-208.49.82-999999999                        11000
99999
DLIN
(De )d O d(Pa )NcEP ( R% )( X% )(Mvar)(Tap)(Tmn)(Tmx)(Phs)(Bc  )(Cn)(Ce)Ns(Cq)(1)(2)(3)(4)(5)(6)
    4         1 1           .641         1.   .9  1.1          331203120213120
    4         2 1           .641         1.   .9  1.1          332003120213120
    4         5 1            3.6
    5         3 1           1.12         1.   .9  1.1          5    150021
    5         6 1            12.
99999
DCAI
(Num) O  Gr E (U) UOp ( P ) ( Q ) (A) (B) (C) (D) (Vfl) (Vf)
    4     1     1   1 1400.  100.                   20. 1000
99999
DGEI
(Num) OA Gr E(U)UOpUOn( Pg)( Qg)( Qn)( Qm)(Xtrf) ( Xd)( Xq)( Xl) (fp)( Sn)(Ptu)
99999
DGER
(No ) O (Pmn ) (Pmx ) ( Fp) (FpR) (FPn) (Fa) (Fr) (Ag) ( Xq) (Sno)
99999
DTPF CIRC
(De ) (Pa ) Nc (De ) (Pa ) Nc (De ) (Pa ) Nc (De ) (Pa ) Nc (De ) (Pa ) Nc O
    4     1  1     4     2  1                                             A
99999
FIM
```

2. Generator models

```
(==============================================================================
( INFINITE BUS
(==============================================================================
(
DMDG MD01
(No) O (L'd)(Ra )( H )( D )(MVA)Fr
0001                              60
(
999999
(
(==============================================================================
( DADOS DE MODELOS DE MAQUINAS SINCRONAS
(==============================================================================
(** modelos de maquinas c/ polos salientes **
DMDG MD02
(
(No)   (CS) (Xd )(Xq )(X'd)     (X"d)(Xl )(T'd)     (T"d)(T"q)
0002   0002  89.0 66.0 36.0      29.0 28.0 5.10      0.060.094
(No)   (Ra )( H )( D )(MVA)Fr C
0002   .19    4.5     520.0   N
(
999999
(
DMDG MD03
(
(No)   (CS) (Xd )(Xq )(X'd)(X'q)(X"d)(Xl )(T'd)(T'q)(T"d)(T"q)
0100        172.0167.948.8080.0033.70 26.6 5.300.6250.0480.066
(No)   (Ra )( H )( D )(MVA)Fr C
0100        3.859     890.0   N
(
999999
(
(==============================================================================
( SATURATION CURVES
(==============================================================================
(
DCST
(
(No)   T (  Y1  ) (  Y2  ) (  X1  )
0002   2 0.029406  5.42112     0.80
0100   2    0.016   10.50       0.8
(
999999
(
FIM
```

3. Excitation system models

```
(=====================================================================
(CDU DATA
(=====================================================================
DCDU
(
( nc ) ( nome cdu )
  0001       AVR-G1
(
(nb)i(tipo) (stip)s(vent) (vsai) ( p1 )( p2 )( p3 )( p4 ) (vmin) (vmax)
   1 ENTRAD                Vref
   2 IMPORT VOLT           Vt
   3 IMPORT VSAD           Vsad
   4 SOMA          Vref    X3
                  -Vt      X3
                   Vsad    X3
   5 LEDLAG        X3      Efd    100.  0.    1.    0.05
   6 EXPORT EFD    Efd
   8 IMPORT PELE           Pel
   9 IMPORT QELE           Qel
  10 IMPORT PMEC           Pm
  11 SAIDA         Pel
  12 SAIDA         Qel
  13 SAIDA         Pm
FIMCDU
(
( nc ) ( nome cdu )
  0002       AVR-G2
(
(nb)i(tipo) (stip)s(vent) (vsai) ( p1 )( p2 )( p3 )( p4 ) (vmin) (vmax)
   1 ENTRAD                Vref
   2 IMPORT VOLT           Vt
   3 IMPORT VSAD           Vsad
   4 SOMA          Vref    X3
                  -Vt      X3
                   Vsad    X3
   5 LEDLAG        X3      Efd    100.  0.    1.    0.05
   6 EXPORT EFD    Efd
   8 IMPORT PELE           Pel
   9 IMPORT QELE           Qel
  10 IMPORT PMEC           Pm
  11 SAIDA         Pel
  12 SAIDA         Qel
  13 SAIDA         Pm
FIMCDU
(
(
( nc ) ( nome cdu )
    03        PSSdw
(-----------------------------------------------------------------------
(      (nome) (     valor      )
(-----------------------------------------------------------------------
DEFPAR #L1    -0.3
DEFPAR #L2    0.3
DEFPAR #K     35.0
DEFPAR #Tw    3.0
DEFPAR #T1    0.142
DEFPAR #T2    0.014
DEFPAR #T3    0.142
DEFPAR #T4    0.014
DEFPAR #T5    0.158
DEFPAR #T6    0.641
(
(nb)i(tipo) (stip)s(vent) (vsai) ( p1 )( p2 )( p3 )( p4 ) (vmin) (vmax)
   1 IMPORT WMAQ           WMAQ
   2 GANHO         WMAQ    X2     #K
   3 WSHOUT        X2      X3     #Tw    1.    #Tw
   4 LEDLAG        X3      X4     1.     #T1   1.    #T2
   5 LEDLAG        X4      X5     1.     #T3   1.    #T4
   6 LIMITA        X8      VSAD                              L1     L2
   7 EXPORT VSAD   VSAD
   8 LEDLAG        X5      X8     1.     #T5   1.    #T6
(-----------------------------------------------------------------------
(      (stip) (vdef) ( d1 )
(-----------------------------------------------------------------------
DEFVAL        L1     #L1
DEFVAL        L2     #L2
FIMCDU
(
(
(
(
```

```
(
(
( nc ) ( nome cdu )
    04        PSSdw
(-----------------------------------------------------------------------
(      (nome) (     valor      )
(-----------------------------------------------------------------------
DEFPAR #L1    -0.3
DEFPAR #L2    0.3
DEFPAR #K     35.
DEFPAR #Tw    3.0
DEFPAR #T1    0.142
DEFPAR #T2    0.014
DEFPAR #T3    0.142
DEFPAR #T4    0.014
DEFPAR #T5    0.158
DEFPAR #T6    0.641
(
(nb)i(tipo) (stip)s(vent) (vsai) ( p1 )( p2 )( p3 )( p4 ) (vmin) (vmax)
   1 IMPORT WMAQ          WMAQ
   2 GANHO         WMAQ   X2     #K
   3 WSHOUT        X2     X3     #Tw   1.    #Tw
   4 LEDLAG        X3     X4     1.    #T1   1.    #T2
   5 LEDLAG        X4     X5     1.    #T3   1.    #T4
   6 LIMITA        X8     VSAD                              L1     L2
   7 EXPORT VSAD   VSAD
   8 LEDLAG        X5     X8     1.    #T5   1.    #T6
(-----------------------------------------------------------------------
(      (stip) (vdef) ( d1 )
(-----------------------------------------------------------------------
DEFVAL        L1     #L1
DEFVAL        L2     #L2
FIMCDU
(
(
( nc ) ( nome cdu )
   100       AVR-G3
(
(nb)i(tipo) (stip)s(vent) (vsai) ( p1 )( p2 )( p3 )( p4 ) (vmin) (vmax)
   1 ENTRAD               Vref
   2 IMPORT VOLT          Vt
   3 IMPORT VSAD          Vsad
   4 SOMA          Vref   X3
                  -Vt     X3
                   Vsad   X3
   5 LEDLAG        X3     Efd    150.  0.    1.    0.05
   6 EXPORT EFD    Efd
   8 IMPORT PELE          Pel
   9 IMPORT QELE          Qel
  10 IMPORT PMEC          Pm
  11 SAIDA         Pel
  12 SAIDA         Qel
  13 SAIDA         Pm
FIMCDU
(
999999
Fim
```

4. Generator and load models definition

```
DMAQ
( Nb)   Gr (P) (Q) Und ( Mg ) ( Mt )u( Mv )u( Me )u(Xvd)(Nbc)
    1   10           3      2      1u            3u
    2   10           3      2      2u            4u
    3   10           1    100    100u
    6   10                  1
999999
(
DCAR IMPR
(tp) ( no) C (tp) ( no) C (tp) ( no) C (tp) ( no)   (A) (B) (C) (D) (Vmn)
BARR     4                                           80  20  0  100  50
BARR     5                                            0  0   0  100  50
999999
```

References

[1] F. J. De Marco, N. Martins and J. C. R. Ferraz, “An automatic method for power system stabilizers phase compensation design,” IEEE Trans. on Power Systems, vol. 28, pp. 997 – 1007, May. 2013.