IEEE PES Task Force on Benchmark Systems for Stability Controls

Report on the 68-bus system (New England / New York Test System)

Version 4.0 - June 20th, 2014

Rodrigo A. Ramos, Roman Kuiava, Tatiane C. C. Fernandes, Liciane C. Pataca and Moussa R. Mansour

---

The present report refers to a small-signal stability and study carried over the New England / New York Test System [1] using the ANAREDE/PacDyn/Anatem package from CEPEL [2]. This report has the objective to show how the simulation of this system must be done using this package. The obtained results are comparable (and exhibit a good match with respect to the electromechanical modes) with the ones provided via Matlab/Simulink [3]. To facilitate the comprehension, this report is divided in three sections (according to the software to be used):

- Load Flow (ANAREDE);
- Small-Signal Stability Assessment via Eigenvalue Calculation (PacDyn);
- Numerical Simulation of the Nonlinear Model (Anatem)

1. Load Flow

The load flow of the 68-bus system was calculated using the ANAREDE software. Both the input file (for the correct initialization of the software) and the obtained results are given below in sections 1.1 and 1.2.

1.1 Input File

To use the ANAREDE software, an input file was produced containing the data on the topology of the system. In this input file, presented in Appendix A (and also available for download at the website), loads were modeled as constant power elements. Furthermore, it is in the input file that the algorithm for load flow calculation is defined. In this case, Newton's method was chosen.

1.2 Results

The results obtained by this load flow calculation can be analyzed from Table **1**. When comparing these results to the ones provided by MATLAB/SIMULINK [3], it is possible to observe a very good match between them. The only difference refers to a standard from ANAREDE, which presents results with a precision up to the first decimal place, while [3] gives results with a precision up to the second decimal place. In spite of that, considering typical approximations from the second to the first decimal place, the level of agreement of the results is almost complete.

Table 1: Results of the load flow calculation for the 68-bus system.

			Generator		Load	
Bus	**V[pu]**	**Angle[Deg]**	**P[MW]**	**Q[MVAR]**	**P[MW]**	**Q[MVAR]**
1	1.04	-8.96	250.00	196.15	0.00	0.00
2	0.98	-0.98	545.00	70.11	0.00	0.00
3	0.98	1.61	650.00	80.86	0.00	0.00
4	1.00	1.67	632.00	0.29	0.00	0.00
5	1.01	-0.63	505.00	116.59	0.00	0.00
6	1.05	3.84	700.00	254.52	0.00	0.00
7	1.06	6.03	560.00	290.85	0.00	0.00
8	1.03	-2.84	540.00	49.15	0.00	0.00
9	1.02	2.65	800.00	59.84	0.00	0.00
10	1.01	-9.65	500.00	-12.73	0.00	0.00
11	1.00	-7.23	1000.00	8.90	0.00	0.00
12	1.01	-22.62	1350.00	275.65	0.00	0.00
13	1.01	-28.66	3591.00	888.28	0.00	0.00
14	1.00	10.96	1785.00	47.61	0.00	0.00
15	1.00	0.02	1000.00	76.74	0.00	0.00
16	1.00	0.0	3379.60	93.94	0.00	0.00
17	0.95	-36.03	0.00	0.00	6000.00	300.00
18	1.00	-5.81	0.00	0.00	2470.00	123.00
19	0.93	-4.26	0.00	0.00	0.00	0.00
20	0.98	-5.88	0.00	0.00	680.00	103.00
21	0.96	-7.06	0.00	0.00	274.00	115.00
22	0.99	-1.80	0.00	0.00	0.00	0.00
23	1.00	-2.16	0.00	0.00	248.00	85.00
24	0.96	-9.88	0.00	0.00	309.00	-92.00
25	1.00	-10.00	0.00	0.00	224.00	47.00
26	0.99	-11.02	0.00	0.00	139.00	17.00
27	0.97	-12.86	0.00	0.00	281.00	76.00
28	0.99	-7.50	0.00	0.00	206.00	28.00
29	0.99	-4.55	0.00	0.00	284.00	27.00
30	0.98	-19.72	0.00	0.00	0.00	0.00

31	0.98	-17.47	0.00	0.00	0.00	0.00
32	0.97	-15.24	0.00	0.00	0.00	0.00
33	0.97	-19.76	0.00	0.00	112.00	0.00
34	0.98	-26.12	0.00	0.00	0.00	0.00
35	1.04	-27.09	0.00	0.00	0.00	0.00
36	0.96	-28.83	0.00	0.00	102.00	-19.50
37	0.96	-11.79	0.00	0.00	0.00	0.00
38	0.99	-18.77	0.00	0.00	0.00	0.00
39	0.99	-39.29	0.00	0.00	267.00	12.60
40	1.04	-13.65	0.00	0.00	65.63	23.53
41	1.00	9.42	0.00	0.00	1000.00	250.00
42	1.00	-0.84	0.00	0.00	1150.00	250.00
43	0.98	-37.91	0.00	0.00	0.00	0.00
44	0.98	-37.99	0.00	0.00	267.60	4.84
45	1.05	-29.36	0.00	0.00	208.00	21.00
46	0.99	-20.54	0.00	0.00	150.70	28.50
47	1.02	-19.51	0.00	0.00	203.10	32.59
48	1.03	-18.38	0.00	0.00	241.20	2.20
49	0.99	-19.82	0.00	0.00	164.00	29.00
50	1.06	-19.05	0.00	0.00	100.00	-147.00
51	1.06	-27.29	0.00	0.00	337.00	-122.00
52	0.95	-12.84	0.00	0.00	158.00	30.00
53	0.99	-18.95	0.00	0.00	252.70	118.60
54	0.99	-11.54	0.00	0.00	0.00	0.00
55	0.96	-13.22	0.00	0.00	322.00	2.00
56	0.92	-11.96	0.00	0.00	200.00	73.60
57	0.91	-11.21	0.00	0.00	0.00	0.00
58	0.91	-10.40	0.00	0.00	0.00	0.00
59	0.90	-13.31	0.00	0.00	234.00	84.00
60	0.91	-14.03	0.00	0.00	208.80	70.80
61	0.96	-23.22	0.00	0.00	104.00	125.00
62	0.91	-7.31	0.00	0.00	0.00	0.00
63	0.91	-8.37	0.00	0.00	0.00	0.00
64	0.84	-8.38	0.00	0.00	9.00	88.00
65	0.91	-8.18	0.00	0.00	0.00	0.00
66	0.92	-10.19	0.00	0.00	0.00	0.00
67	0.93	-11.43	0.00	0.00	320.00	153.00
68	0.95	-10.07	0.00	0.00	329.00	32.00

From the result of the load flow (which gives information for the calculation of the equilibrium point of the system), it is possible to apply a set of techniques involving linearization to analyze the local, small-signal stability of the system through the calculation of the eigenvalues of the state matrix of the linearized system model. This procedure is carried out by the PacDyn software and is presented in the next section.

2. Small-Signal Stability Analysis of the System

To use the PacDyn software for assessment of the small-signal stability of the 68-bus system, two input files are necessary. One of them contains the topological data of the system and the results of the load flow calculation, while the other contains the types of models, the structures and the parameters of the generators and its associated controllers. The former is obtained as an output file from the ANAREDE software in the "*.his" or "*.sav" formats. The latter, containing the dynamic data for the system, must be constructed and saved in the "*.dyn" format. This format is described in more detail in section 2.1, while section 2.2 presents the results of the whole study.

2.1 The input file with the dynamic data for the system

In the input file containing the dynamic data for the system (the "*.dyn" file) the models to represent the generators in the system must be chosen, and the controllers for each respective machine must be either chosen as built-in models or defined by the user with a particular syntax. For this study, the details on the model of the generators and its respective controllers are presented in the sequence:

a) Generators

The 68-bus system is composed by 16 generators, and all of them are represented by a 6th order model in this report. The PacDyn software provides 8 different built-in models to describe a synchronous machine. Equations (1)-(8), which compose model #5, are presented in the sequence. Details about the variables and parameters can be found in [2]. Table 2 presents the parameters values for the generators.

$$2H\,\dot{\omega} = T_m - T_e - D\omega_r \tag{1}$$

$$\dot{\delta} = \omega_r - \omega_s \tag{2}$$

$$\dot{E}'_d = \frac{1}{T'_{qo}}\left[\frac{x_q - x'_q}{x'_q - x_l}E''_d - \frac{x_q - x_l}{x'_q - x_l}E'_d + \frac{(x_q - x'_q)(x''_q - x_l)}{x'_q - x_l}I_q + SAT_q\right] \tag{3}$$

$$\dot{E}'_q = \frac{1}{T'_{do}}\left[E_{fd} + \frac{x_d - x'_d}{x'_d - x_l}E''_q - \frac{x_d - x_l}{x'_d - x_l}E'_q + \frac{(x_d - x'_d)(x''_d - x_l)}{x'_d - x_l}I_d - SAT_d\right] \tag{4}$$

$$\dot{E''}_d = \frac{1}{T''_{qo}}\left[-E''_d + E'_d + \left(x'_q - x''_q\right)I_q\right] + \frac{x''_q - x_l}{x'_q - x_l}\frac{dE'_d}{dt} \tag{5}$$

$$\dot{E''}_q = \frac{1}{T''_{do}}\left[-E''_q + E'_q - (x'_d - x''_d)I_d\right] + \frac{x''_d - x_l}{x'_d - x_l}\frac{dE'_q}{dt} \tag{6}$$

$$V_q = \left[E''_q - x''_d I_d - R_a I_q\right] \tag{7}$$

$$V_d = \left[E''_d - x''_q I_q - R_a I_d\right] \tag{8}$$

Table 2: Generator parameters.

Unit	H	R_a	x''_d	x''_q	x'_d	x'_q	x_d	x_q	x_l	T''_{do}	T''_{qo}	T'_{do}	T'_{qo}
1	42.0	0	0.025	0.025	0.031	0.0417	0.10	0.069	0.0125	0.05	0.035	10.2	1.5
2	30.2	0	0.050	0.050	0.0697	0.0933	0.295	0.282	0.035	0.05	0.035	6.56	1.5
3	35.8	0	0.045	0.045	0.0531	0.0714	0.2495	0.237	0.0304	0.05	0.035	5.7	1.5
4	28.6	0	0.035	0.035	0.0436	0.0586	0.262	0.258	0.0295	0.05	0.035	5.69	1.5
5	26.0	0	0.050	0.050	0.066	0.0883	0.330	0.310	0.027	0.05	0.035	5.4	0.44
6	34.8	0	0.040	0.040	0.050	0.0675	0.254	0.241	0.0224	0.05	0.035	7.3	0.4
7	26.4	0	0.040	0.040	0.049	0.0667	0.295	0.292	0.0322	0.05	0.035	5.66	1.5
8	24.3	0	0.045	0.045	0.057	0.0767	0.290	0.280	0.028	0.05	0.035	6.7	0.41
9	34.5	0	0.045	0.045	0.057	0.0767	0.2106	0.205	0.0298	0.05	0.035	4.79	1.96
10	31.0	0	0.040	0.040	0.0457	0.0615	0.169	0.115	0.0199	0.05	0.035	9.37	1.5
11	28.2	0	0.012	0.012	0.018	0.0241	0.128	0.123	0.0103	0.05	0.035	4.1	1.5
12	92.3	0	0.025	0.025	0.031	0.0420	0.101	0.095	0.022	0.05	0.035	7.4	1.5
13	248.0	0	0.004	0.004	0.0055	0.0074	0.0296	0.0286	0.003	0.05	0.035	5.9	1.5
14	300.0	0	0.0023	0.0023	0.0029	0.0038	0.018	0.0173	0.0017	0.05	0.035	4.1	1.5
15	300.0	0	0.0023	0.0023	0.0029	0.0038	0.018	0.0173	0.0017	0.05	0.035	4.1	1.5
16	225.0	0	0.0055	0.0055	0.0071	0.0095	0.0356	0.0334	0.0041	0.05	0.035	7.8	1.5

Unit	D	MVA base
1	0	100
2	0	100
3	0	100
4	0	100
5	0	100
6	0	100
7	0	100
8	0	100
9	0	100
10	0	100
11	0	100
12	0	100
13	0	200
14	0	100
15	0	100
16	0	200

b) Controllers

The generators in the buses 1 to 12 in this system are equipped with automatic voltage regulators (AVRs) and power system stabilizers (PSSs). The generators in buses 1 to 8 and 10 to 12 use the AVR-DC4B model [5] with same parameter values and the generator in bus 9 use the AVR-STA1 model [4]. For the records, the block diagram of each controller model is presented as follows in Figures 1 and 2. Tables 3 and 4 present the parameter values for the AVRs and PSS, respectively.

- **Voltage regulator (DC4B model)**

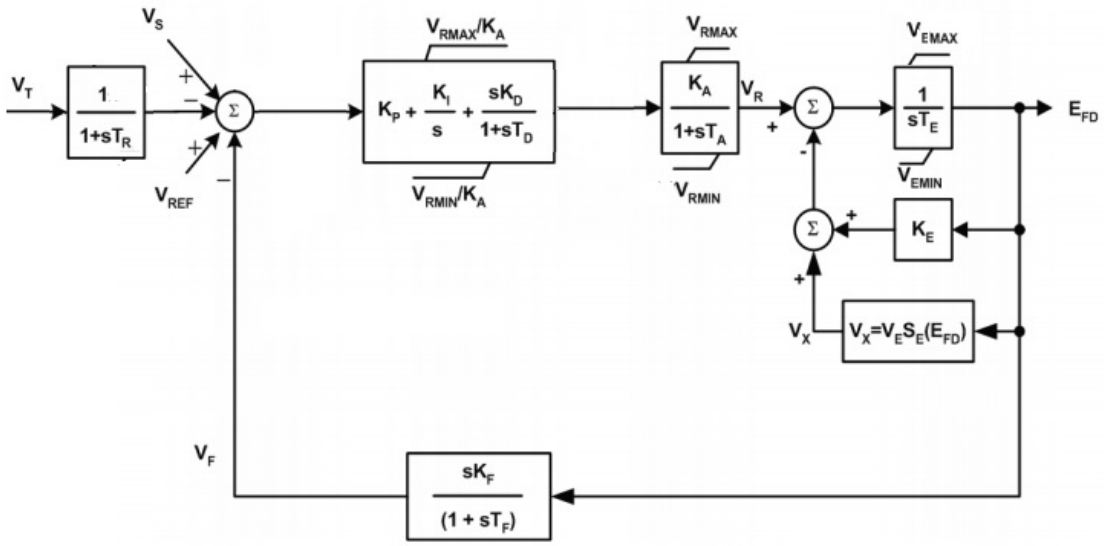

Figure 1: Model of the voltage regulator for generators in the buses 1 to 8 and 10 to 12. Modified from [4].

- **Voltage regulator (ST1A model)**

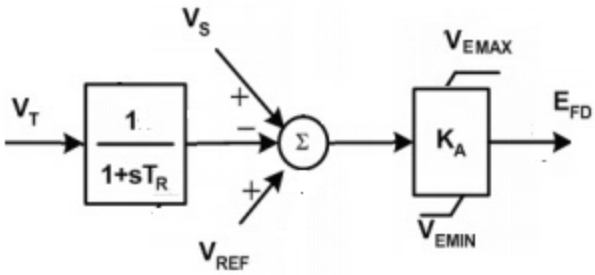

Figure 2: Model of the voltage regulator for generator in the bus 9. Modified from [4].

- **PSS**

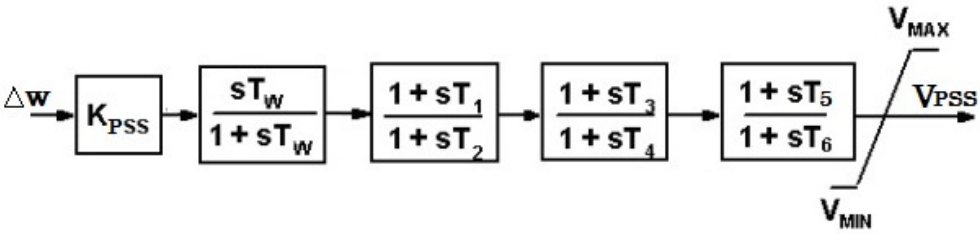

Figure 3: Model of the PSS for generators in the buses 1 to 12.

Table 3: Parameter values for the AVRs.

Unit	AVR model	T_R	K_P	K_I	K_D	K_A	T_A	T_D	V_{RMIN} V_{EMIN}	V_{RMAX} V_{EMAX}	K_E	T_E	K_F	T_F	Bex	Aex
1	DC4B	0.01	200	50	50	1	0.02	0.01	-10	10	1	0.785	0.03	1	1.959	3.19e-5
2	DC4B	0.01	200	50	50	1	0.02	0.01	-10	10	1	0.785	0.03	1	1.959	3.19e-5

3	DC4B	0.01	200	50	50	1	0.02	0.01	-10	10	1	0.785	0.03	1	1.959	3.19e-5
4	DC4B	0.01	200	50	50	1	0.02	0.01	-10	10	1	0.785	0.03	1	1.959	3.19e-5
5	DC4B	0.01	200	50	50	1	0.02	0.01	-10	10	1	0.785	0.03	1	1.959	3.19e-5
6	DC4B	0.01	200	50	50	1	0.02	0.01	-10	10	1	0.785	0.03	1	1.959	3.19e-5
7	DC4B	0.01	200	50	50	1	0.02	0.01	-10	10	1	0.785	0.03	1	1.959	3.19e-5
8	DC4B	0.01	200	50	50	1	0.02	0.01	-10	10	1	0.785	0.03	1	1.959	3.19e-5
9	ST1A	0.01	---	---	---	200	---	---	-5	5	---	---	---	---	---	---
10	DC4B	0.01	200	50	50	1	0.02	0.01	-10	10	1	0.785	0.03	1	1.959	3.19e-5
11	DC4B	0.01	200	50	50	1	0.02	0.01	-10	10	1	0.785	0.03	1	1.959	3.19e-5
12	DC4B	0.01	200	50	50	1	0.02	0.01	-10	10	1	0.785	0.03	1	1.959	3.19e-5

Table 4: Parameter values for the PSSs connected to generators in buses 1 to 12.

Unit	K_{PSS}	T_w	T_1	T_2	T_3	T_4	T_5	T_6	V_{MIN}	$V_{MÁX}$
1	20	15	0.15	0.04	0.15	0.04	0.15	0.04	-0.05	0.2
2	20	15	0.15	0.04	0.15	0.04	0.15	0.04	-0.05	0.2
3	20	15	0.15	0.04	0.15	0.04	0.15	0.04	-0.05	0.2
4	20	15	0.15	0.04	0.15	0.04	0.15	0.04	-0.05	0.2
5	20	15	0.15	0.04	0.15	0.04	0.15	0.04	-0.05	0.2
6	20	15	0.15	0.04	0.15	0.04	0.15	0.04	-0.05	0.2
7	20	15	0.15	0.04	0.15	0.04	0.15	0.04	-0.05	0.2
8	20	15	0.15	0.04	0.15	0.04	0.15	0.04	-0.05	0.2
9	12	10	0.09	0.02	0.09	0.02	0	0	-0.05	0.2
10	20	15	0.15	0.04	0.15	0.04	0.15	0.04	-0.05	0.2
11	20	15	0.15	0.04	0.15	0.04	0.15	0.04	-0.05	0.2
12	20	15	0.15	0.04	0.15	0.04	0.15	0.04	-0.05	0.2

2.2 Results

The results obtained by PacDyn on the small-signal stability analysis of the 68-bus system can be seen in Tables 5, 6 and 7. These results are comparable with the ones calculated via MATLAB/SIMULINK [3], as it can be seen in Figures 4, 5 and 6. Table 5 shows the electromechanical modes with normalized participation factors of highest participating states for the case where the generators are not equipped with PSSs. It can be seen that three modes are unstable and others 9 modes are poorly damped (considering a minimum acceptable damping of 5%).

Table 5: Electromechanical modes with normalized participation factors of highest participating states for the case where the generators are not equipped with PSSs.

Mode	Damp (%)	Freq. (Hz)	State	Partici-pation Factor	State	Partici-pation Factor	State	Partici-pation Factor	State	Partici-pation Factor
1	-0.4344	0.4036	DELT13	1	WW13	0.7416	WW15	0.5558	WW14	0.5255
2	0.9384	0.5257	DELT14	1	WW16	0.7377	WW14	0.5003	DELT13	0.1138
3	-3.8542	0.6097	DELT13	1	WW13	0.8299	DELT12	0.1373	WW6	0.1356
4	3.3258	0.7787	DELT15	1	WW15	0.7552	WW14	0.3044	DELT14	0.1483
5	0.2562	0.9983	DELT2	1	WW2	0.9920	DELT3	0.9131	WW3	0.9048
6	3.0289	1.0724	DELT12	1	WW12	0.9851	WW13	0.1927	DELT13	0.1793
7	-1.8063	1.0932	DELT9	1	WW9	0.9959	DELT1	0.3372	WW1	0.3333
8	3.7161	1.1578	DELT5	1	WW5	0.9997	WW6	0.9587	DELT6	0.9582
9	3.5884	1.1849	WW2	1	DELT2	0.9997	DELT3	0.9281	WW3	0.9278
10	0.7524	1.2173	DELT10	1	WW10	0.9908	WW09	0.4303	DELT9	0.4239
11	1.3558	1.2600	WW1	1	DELT1	0.9964	DELT10	0.7684	WW10	0.7638
12	6.4883	1.4709	DELT8	1	WW8	0.9997	WW1	0.4341	DELT1	0.4339
13	7.0342	1.4871	DELT4	1	WW4	1	WW5	0.4834	DELT5	0.4834
14	6.7992	1.5031	DELT7	1	WW7	1	WW6	0.5567	DELT6	0.2482
15	3.9023	1.7531	DELT11	1	WW11	0.9934	WW10	0.0335	DELT10	0.0322

Table 6: Electromechanical modes with normalized participation factors of highest participating states for the case where only generator in bus 9 is equipped with PSS.

Mode	Damp (%)	Freq. (Hz)	State	Partici-pation Factor	State	Partici-pation Factor	State	Partici-pation Factor	State	Partici-pation Factor
1	1.4284	0.3985	DELT13	1	WW13	0.7155	WW15	0.6038	WW14	0.5641
2	1.3096	0.5247	DELT14	1	WW16	0.7199	WW14	0.5039	DELT15	0.0863
3	-2.1499	0.6140	DELT13	1	WW13	0.8261	DELT12	0.1373	WW6	0.1318
4	3.3288	0.7787	DELT15	1	WW15	0.7552	WW14	0.3045	DELT14	0.1484
5	0.2560	0.9981	DELT2	1	WW2	0.9918	DELT3	0.9138	WW3	0.9053
6	3.1788	1.0717	DELT12	1	WW12	0.9847	WW13	0.1971	DELT13	0.1834
7	16.915	0.9443	DELT9	1	WW9	0.6705	PSSG9	0.2210	PSSG9	0.2210
8	3.8773	1.1553	WW5	1	DELT5	0.9975	DELT6	0.7604	WW6	0.7577
9	3.7881	1.1840	WW2	1	DELT2	0.9939	DELT3	0.5149	WW3	0.5110
10	3.3534	1.1823	WW3	1	DELT3	0.9888	DELT10	0.8813	WW10	0.8711
11	3.6863	1.2490	DELT10	1	WW10	0.9934	WW1	0.6368	DELT1	0.6311
12	6.5629	1.4698	DELT8	1	WW8	0.9997	WW1	0.4538	DELT1	0.4536
13	7.0354	1.4871	DELT4	1	WW4	1	WW5	0.4834	DELT5	0.4834
14	6.7989	1.5031	DELT7	1	WW7	1	WW6	0.5568	DELT6	0.5567
15	3.9063	1.7531	DELT11	1	WW11	0.9934	WW10	0.0335	DELT10	0.0322

Table 7: Electromechanical modes for the case where the generators in the buses 1 to 12 are equipped with PSSs.

Mode	Damp (%)	Freq. (Hz)	Mode	Damp (%)	Freq. (Hz)
1	33.543	0.3137	9	28.304	1.1365
2	3.6236	0.5199	10	13.425	1.2781
3	9.6290	0.5906	11	18.826	1.1883
4	3.3851	0.7785	12	32.064	1.2925
5	27.134	0.9721	13	39.543	1.2882
6	18.581	1.0791	14	33.119	1.3674
7	23.607	0.9391	15	23.874	5.0745
8	53.167	1.1086			

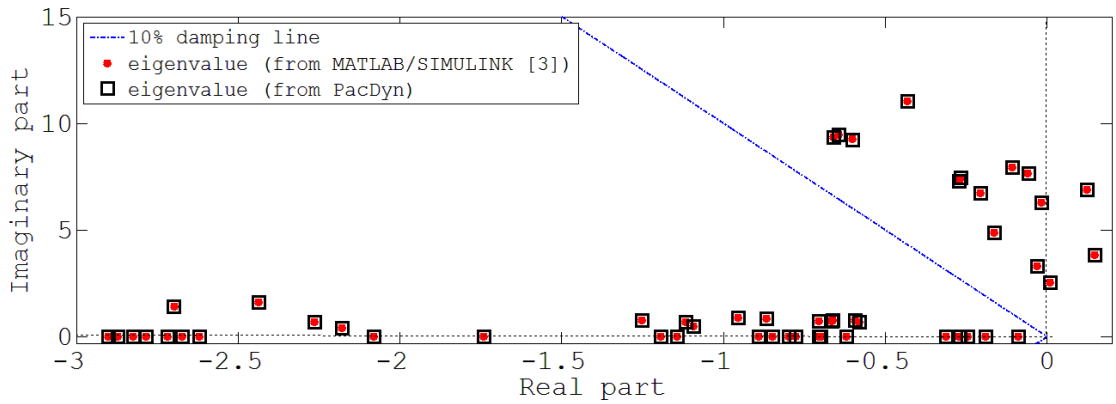

Figure 4: Eigenvalues (calculated from MATLAB/SIMULINK [3] and PacDyn) for the case where the generators are not equipped with PSSs.

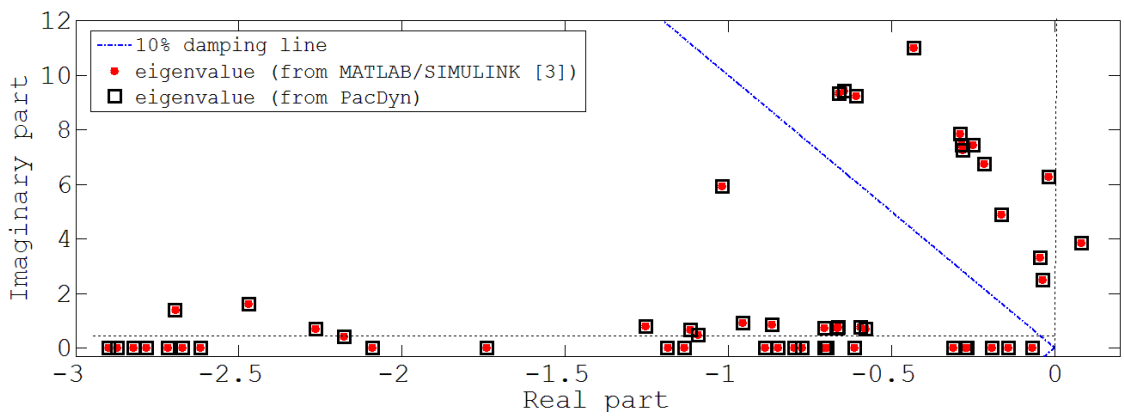

Figure 5: Eigenvalues (calculated from MATLAB/SIMULINK [3] and PacDyn) for the case where only generator in bus 9 is equipped with PSS.

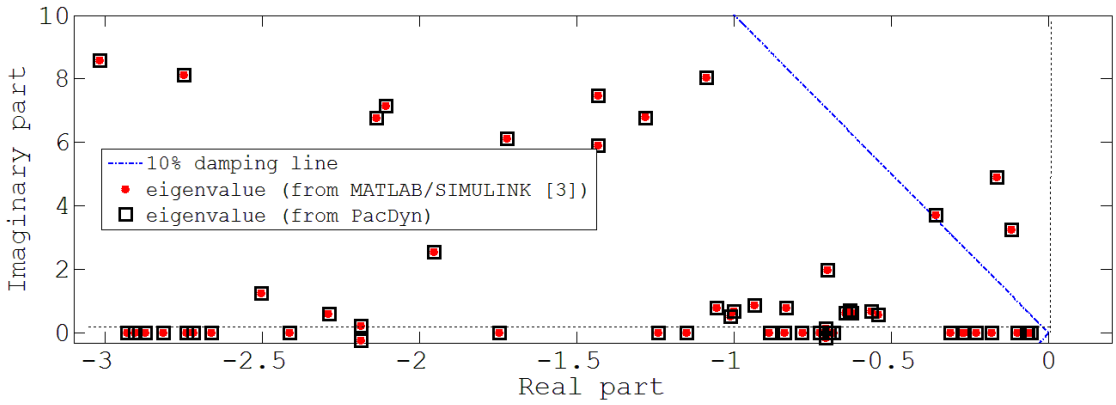

Figure 6: Eigenvalues (calculated from MATLAB/SIMULINK [3] and PacDyn) for the case where the generators in the buses 1 to 12 are equipped with PSSs.

3. Nonlinear Simulation of the Model using ANATEM

To validate the results of the linearized analyzes presented in the previous section, a few simulations of the dynamic response of the systems to certain perturbations were simulated via numerical integration of the nonlinear equations composing the system model, using the ANATEM software. In this section, the machine and controller models used in these simulations, as well as a set of results from one of the mentioned simulations, as presented.

To use the ANATEM software, a main input file must be built containing information such as the operating point of the system and the data corresponding to the generators and its respective controllers. Analogously to the PacDyn software, the equilibrium point is provided by the "*.his" or "*.sav" files generated by the ANAREDE software. The generator and controller models used for simulation of the 68 bus system are presented in the sequence. The complete model files for the execution of the ANATEM software can be seen in Appendix C, and can also be retrieved from the current version of the website.

3.1 Generator Models

For all the system generators (1 to 16) a pre-defined model in ANATEM was used. It consists of a round rotor machine with one winding and three damper windings, one of them being along the direct axis and the other two along the quadrature axis. This pre-defined model is presented in Figures 7 (swing equations), 8 (direct axis equations) and 9 (quadrature axis equations).

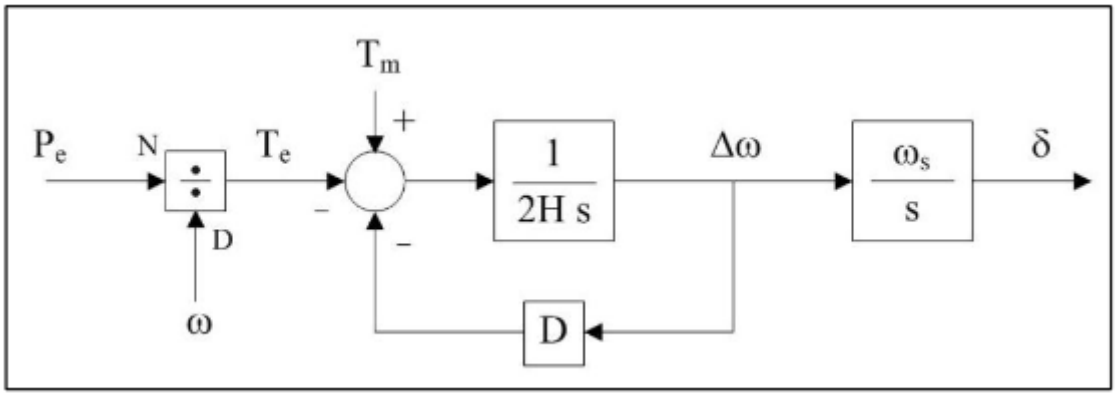

Figure 7: Block diagram for the swing equation of the model for generators 1 to 16.

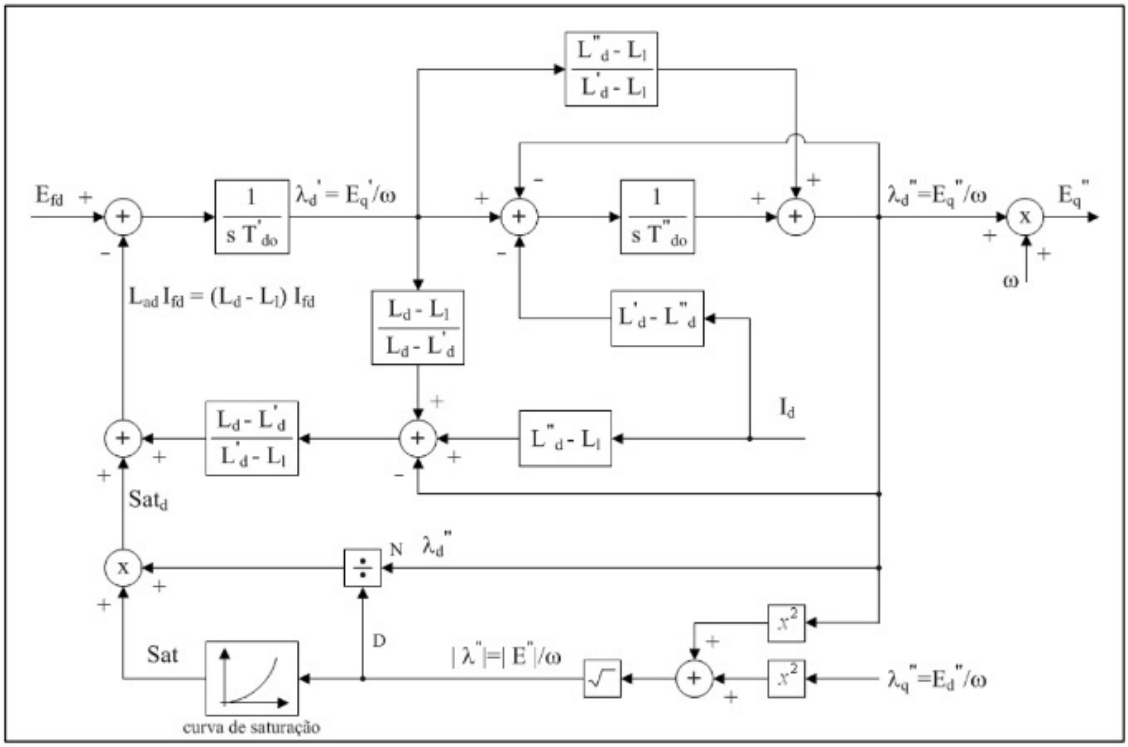

Figure 8: Block diagram for the direct axis equations of the model for generators 1 to 16.

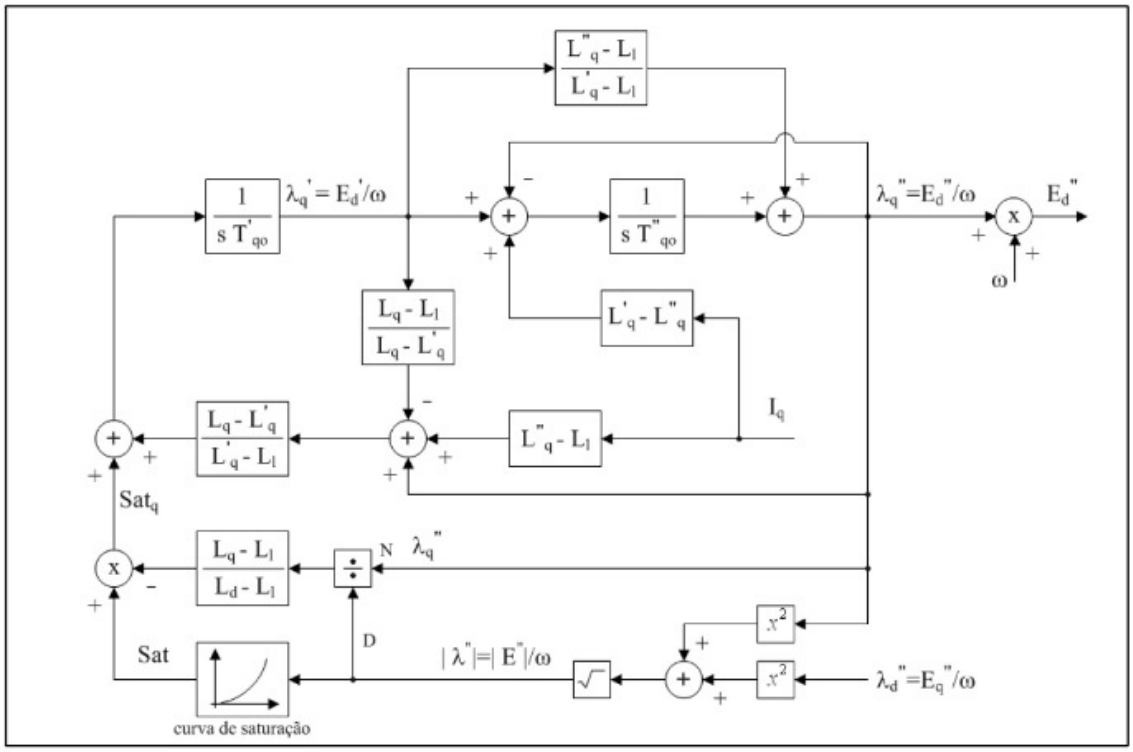

Figure 9: Block diagram for the quadrature axis equations of the model for generators 1 to 16.

In this simulation the saturation curves of the generators were not represented. The parameters used for these models are presented in Table 2. The synchronous machine models are provided within the file 16GENERATOR.blt, presented in Appendix C and available for download at the website.

3.2 Controller Models

The controller models were defined by the users via the execution code DCDU and are given in the file 16GENERATOR.cdu, also presented in Appendix C. These models and its parameters were also retrieved from the website, and were already presented in Figures 1, 2 and 3 of this report.

3.3 Results

a) Perturbation Data

In the nonlinear simulations using ANATEM, two cases were considered (and compared with nonlinear simulation obtained from MATLAB/SIMULINK [3]):

i) A 20s simulation with a 2% step in Vref of the test machine at t=1.0s and a -2% step in the same Vref at t=11s.

ii) The connection at t=1.0s of a 50MVAr shunt reactor to the bus 3, removing this reactor at t=11s and simulating until t=20s.

b) Simulation

The total simulation time was 10s and the integration step was 0.008s. The angle of generator 16 was taken as a reference for angle differences. The main input file 68bus_ANATEM.stb used in simulation is presented in Appendix C and can also be downloaded from the website.

The relative rotor slips for generators 3, 9 and 15 (in relation to generator 16) are presented in Figures 10 to 15. The results obtained from Anatem are also being compared with the ones obtained from MATLAB/SIMULINK [3].

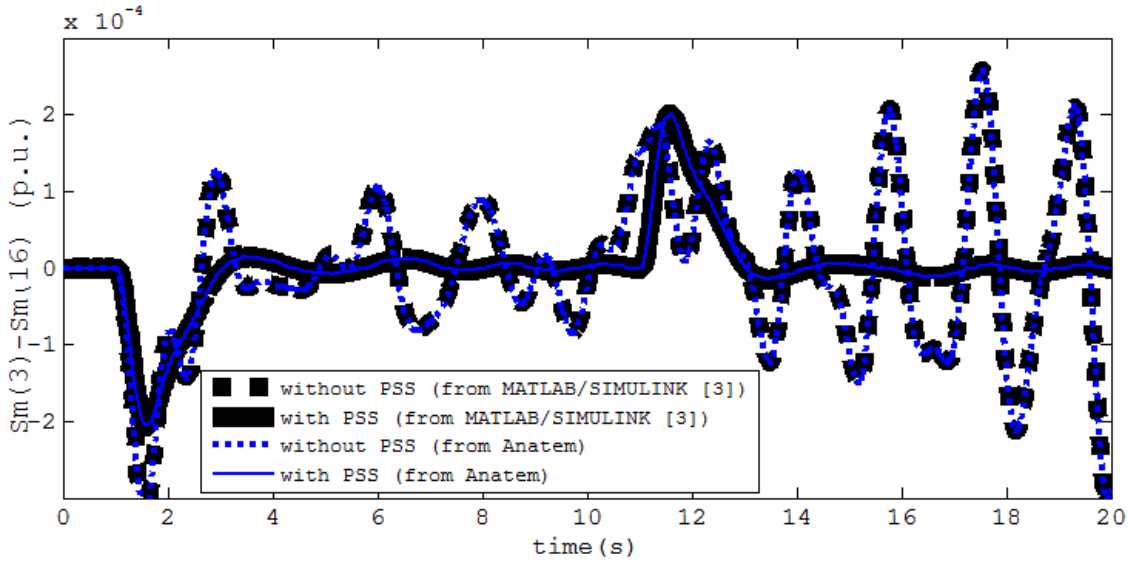

Figure 10: Relative rotor slips for G3 for case (i).

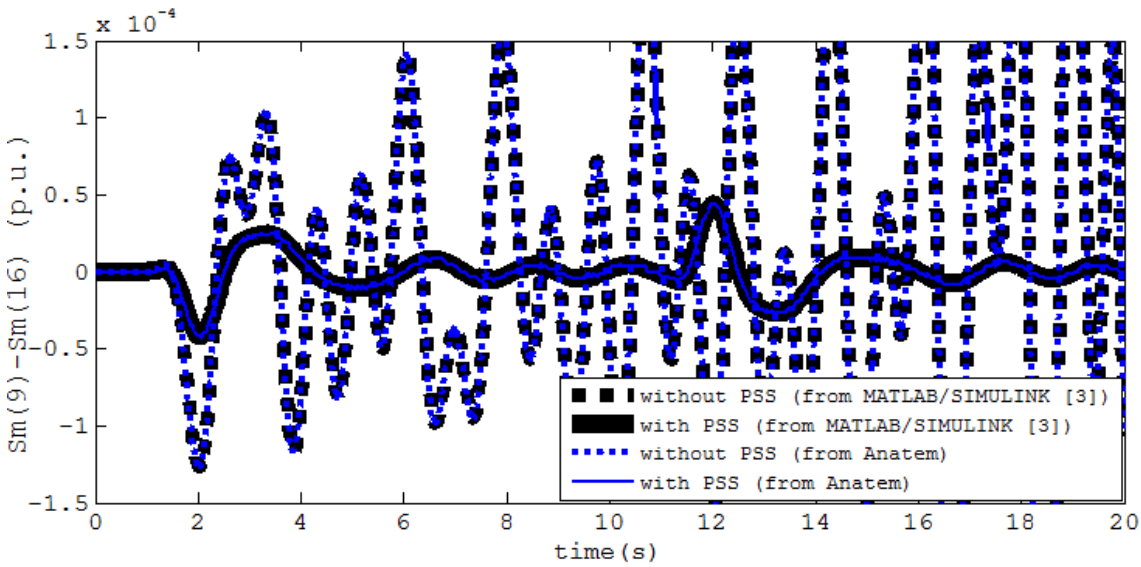

Figure 11: Relative rotor slips for G9 for case (i).

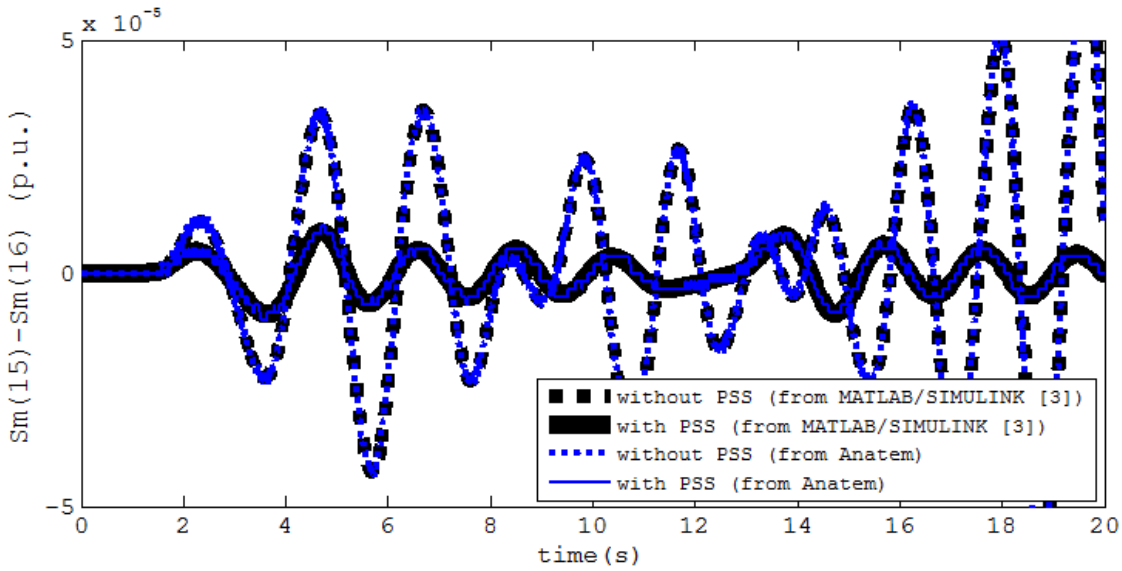

Figure 12: Relative rotor slips for G15 for case (i).

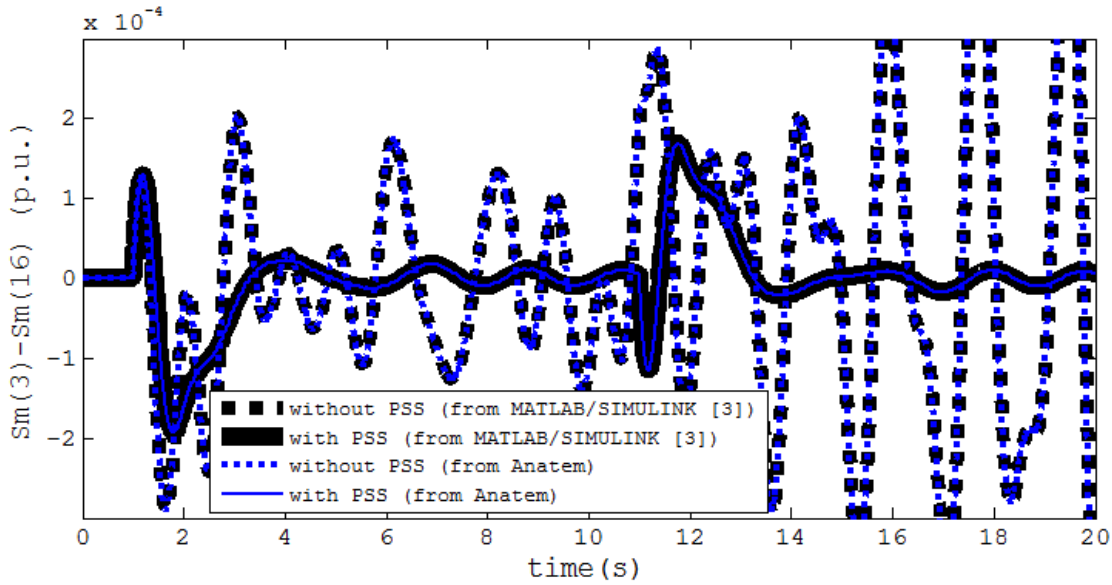

Figure 13: Relative rotor slips for G3 for case (ii).

4. Conclusions

As a conclusion of this study on the small-signal stability of the New England / New York test system, we can see that the results obtained with the ANAREDE/PacDyn/Anatem package exhibit a satisfactory similarity to the ones provided via MATLAB/SIMULINK [3]. This similarity is observed in the electromechanical modes, which are the main focus of this Task Force, but also extends to the other eigenvalues, which is quite encouraging from the benchmarking viewpoint.

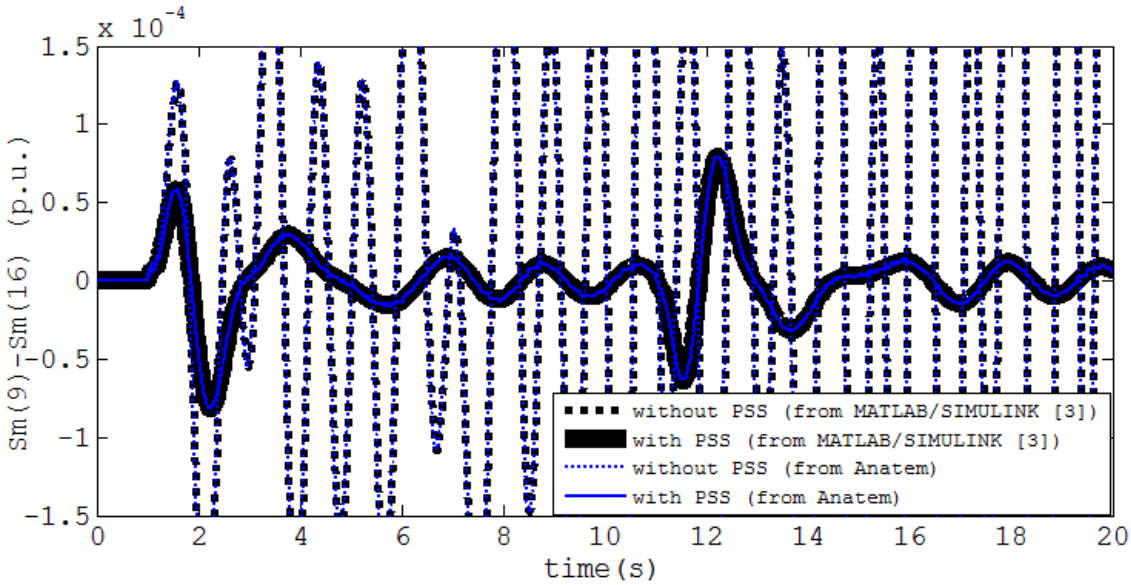

Figure 14: Relative rotor slips for G9 for case (ii).

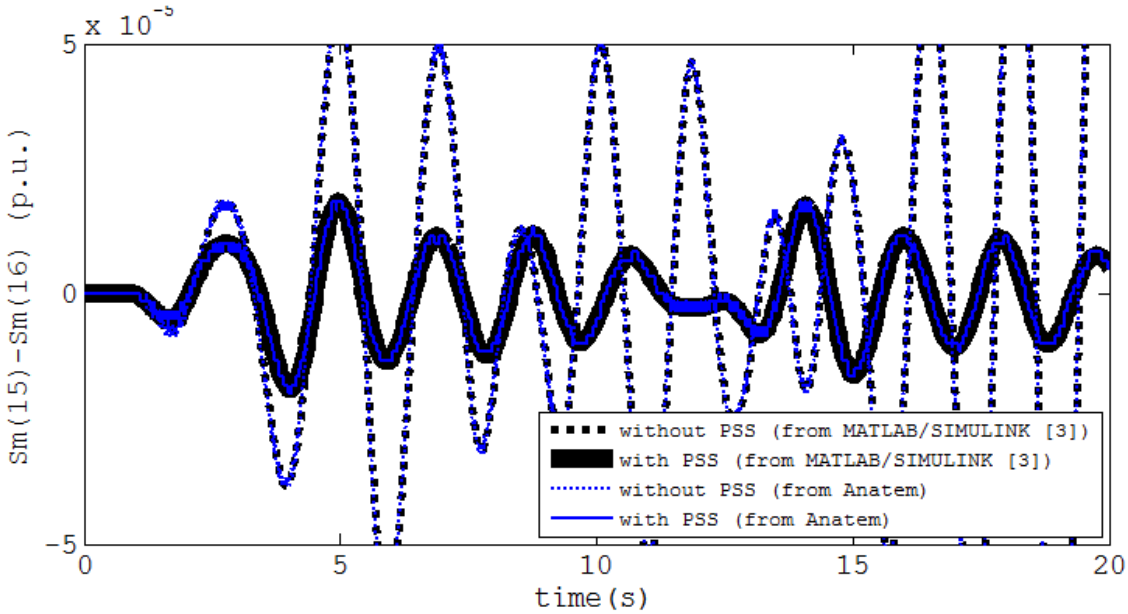

Figure 15: Relative rotor slips for G15 for case (ii) .

Appendix A

In this appendix, the input file necessary for the correct initialization of the ANAREDE software is presented. Figure A-1 shows how the bus data must be inserted while Figure A-2 performs a similar task with respect to the line data.

```
001 TITU
002 **** New-England / New-York Test System ****
003 DBAR
004 (   0    |    1    |    2    |    3    |    4    |    5    |    6    |    7    |
005 (234567890123456789012345678901234567890123456789012345678901234567890123456789 0
006 (Num)OETGb(    name    )Gl( V)( A)( Pg)( Qg)( Qn)( Qm)(Bc  )( Pl)( Ql)( Sh)Are(Vf)
007   01   1  Barra01       1045  0. 250.   0.-999.9999.         0.   0.       2
008   02   1  Barra02       0980  0. 545.   0.-999.9999.         0.   0.       2
009   03   1  Barra03       0983  0. 650.   0.-999.9999.         0.   0.       2
010   04   1  Barra04       0997  0. 632.   0.-999.9999.         0.   0.       2
011   05   1  Barra05       1011  0. 505.   0.-999.9999.         0.   0.       2
012   06   1  Barra06       1050  0. 700.   0.-999.9999.         0.   0.       2
013   07   1  Barra07       1063  0. 560.   0.-999.9999.         0.   0.       2
014   08   1  Barra08       1030  0. 540.   0.-999.9999.         0.   0.       2
015   09   1  Barra09       1025  0. 800.   0.-999.9999.         0.   0.       2
016   10   1  Barra10       1010  0. 500.   0.-999.9999.         0.   0.       1
017   11   1  Barra11       1000  0.1000.   0.-999.9999.         0.   0.       1
018   12   1  Barra12       1015  0.1350.   0.-999.9999.         0.   0.       1
019   13   1  Barra13       1011  0.3591.   0.-999.9999.         0.   0.       1
020   14   1  Barra14       1000  0.1785.   0.-999.9999.         0.   0.       3
021   15   1  Barra15       1000  0.1000.   0.-999.9999.         0.   0.       4
022   16   2  Barra16       1000  0.4000.   0.-999.9999.         0.   0.       5
023   17   0  Barra17       1000  0.   0.   0.                6000. 300.       1
024   18   0  Barra18       1000  0.   0.   0.                2470. 123.       5
025   19   0  Barra19       1000  0.   0.   0.                   0.   0.       2
026   20   0  Barra20       1000  0.   0.   0.                 680. 103.       2
027   21   0  Barra21       1000  0.   0.   0.                 274. 115.       2
028   22   0  Barra22       1000  0.   0.   0.                   0.   0.       2
029   23   0  Barra23       1000  0.   0.   0.                 248.  85.       2
030   24   0  Barra24       1000  0.   0.   0.                 309. -92.       2
031   25   0  Barra25       1000  0.   0.   0.                 224.  47.       2
032   26   0  Barra26       1000  0.   0.   0.                 139.  17.       2
033   27   0  Barra27       1000  0.   0.   0.                 281.  76.       2
034   28   0  Barra28       1000  0.   0.   0.                 206.  28.       2
035   29   0  Barra29       1000  0.   0.   0.                 284.  27.       2
036   30   0  Barra30       1000  0.   0.   0.                   0.   0.       1
037   31   0  Barra31       1000  0.   0.   0.                   0.   0.       1
038   32   0  Barra32       1000  0.   0.   0.                   0.   0.       1
039   33   0  Barra33       1000  0.   0.   0.                 112.   0.       1
040   34   0  Barra34       1000  0.   0.   0.                   0.   0.       1
041   35   0  Barra35       1000  0.   0.   0.                   0.   0.       1
042   36   0  Barra36       1000  0.   0.   0.                 102.-19.5       1
043   37   0  Barra37       1000  0.   0.   0.                   0.   0.       2
044   38   0  Barra38       1000  0.   0.   0.                   0.   0.       1
045   39   0  Barra39       1000  0.   0.   0.                 267. 12.6       1
046   40   0  Barra40       1000  0.   0.   0.                65.63 23.53       1
047   41   0  Barra41       1000  0.   0.   0.                1000. 250.       3
048   42   0  Barra42       1000  0.   0.   0.                1150. 250.       4
049   43   0  Barra43       1000  0.   0.   0.                   0.   0.       1
050   44   0  Barra44       1000  0.   0.   0.                267.6 4.84       1
```

Continue in next page …

```
051    45   0  Barra45      1000  0.   0.   0.                208.  21.      1
052    46   0  Barra46      1000  0.   0.   0.               150.7 28.5      1
053    47   0  Barra47      1000  0.   0.   0.               203.132.59      1
054    48   0  Barra48      1000  0.   0.   0.               241.2  2.2      1
055    49   0  Barra49      1000  0.   0.   0.                164.  29.      1
056    50   0  Barra50      1000  0.   0.   0.                100.-147.      1
057    51   0  Barra51      1000  0.   0.   0.                337.-122.      1
058    52   0  Barra52      1000  0.   0.   0.                158.  30.      2
059    53   0  Barra53      1000  0.   0.   0.               252.7118.6      1
060    54   0  Barra54      1000  0.   0.   0.                  0.   0.      2
061    55   0  Barra55      1000  0.   0.   0.                322.   2.      2
062    56   0  Barra56      1000  0.   0.   0.                200. 73.6      2
063    57   0  Barra57      1000  0.   0.   0.                  0.   0.      2
064    58   0  Barra58      1000  0.   0.   0.                  0.   0.      2
065    59   0  Barra59      1000  0.   0.   0.                234.  84.      2
066    60   0  Barra60      1000  0.   0.   0.               208.8 70.8      2
067    61   0  Barra61      1000  0.   0.   0.                104. 125.      1
068    62   0  Barra62      1000  0.   0.   0.                  0.   0.      2
069    63   0  Barra63      1000  0.   0.   0.                  0.   0.      2
070    64   0  Barra64      1000  0.   0.   0.                  9.  88.      2
071    65   0  Barra17      1000  0.   0.   0.                  0.   0.      2
072    66   0  Barra19      1000  0.   0.   0.                  0.   0.      2
073    67   0  Barra67      1000  0.   0.   0.                320. 153.      2
074    68   0  Barra68      1000  0.   0.   0.                329.  32.      2
075  99999
```

Figure A-1: Input file for entering the bus data.

```
076 DLIN
077 (   0    |    1    |    2    |    3    |    4    |    5    |    6    |    7    |
078 (234567890123456789012345678901234567890123456789012345678901234567890123456789 0
079 (De )d O d(Pa )NcEP ( R% )( X% )(Mvar)(Tap)(Tmn)(Tmx)(Phs)(Bc  )(Cn)(Ce)Ns
080    01        54      00.00  1.81       1.025
081    02        58      00.00  2.50       1.070
082    03        62      00.00  2.00       1.070
083    04        19      00.07  1.42       1.070
084    05        20      00.09  1.80       1.009
085    06        22      00.00  1.43       1.025
086    07        23      00.05  2.72
087    08        25      00.06  2.32       1.025
088    09        29      00.08  1.56       1.025
089    10        31      00.00  2.60       1.040
090    11        32      00.00  1.30       1.040
091    12        36      00.00  0.75       1.040
092    13        17      00.00  0.33       1.040
093    14        41      00.00  0.15       1.000
094    15        42      00.00  0.15       1.000
095    16        18      00.00  0.30       1.000
096    17        36      00.05  0.45 32.00
097    18        49      00.76 11.41 116.0
098    18        50      00.12  2.88 206.0
099    19        68      00.16  1.95 30.40
100    20        19      00.07  1.38       1.060
101    21        68      00.08  1.35 25.48
102    22        21      00.08  1.40 25.65
103    23        22      00.06  0.96 18.46
104    24        23      00.22  3.50 36.10
105    24        68      00.03  0.59 06.80
106    25        54      00.70  0.86 14.60
107    26        25      00.32  3.23 53.10
108    27        37      00.13  1.73 32.16
109    27        26      00.14  1.47 23.96
110    28        26      00.43  4.74 78.02
111    29        26      00.57  6.25 102.9
112    29        28      00.14  1.51 24.90
```

Continue in next page …

```
113     30        53      00.08  0.74 48.00
114     30        61      0.095  0.91 58.00
115     31        30      00.13  1.87 33.30
116     31        53      00.16  1.63 25.00
117     32        30      00.24  2.88 48.80
118     33        32      00.08  0.99 16.80
119     34        33      00.11  1.57 20.20
120     34        35      00.01  0.74      0.946
121     36        34      00.33  1.11 145.0
122     36        61      00.11  0.98 68.00
123     37        68      00.07  0.89 13.42
124     38        31      00.11  1.47 24.70
125     38        33      00.36  4.44 69.30
126     40        41      00.60  8.40 315.0
127     40        48      00.20  2.20 128.0
128     41        42      00.40  6.00 225.0
129     42        18      00.40  6.00 225.0
130     43        17      00.05  2.76
131     44        39      00.00  4.11
132     44        43      00.01  0.11
133     45        35      00.07  1.75 139.0
134     45        39      00.00  8.39
135     45        44      00.25  7.30
136     46        38      00.22  2.84 43.00
137     47        53      00.13  1.88 131.0
138     48        47      0.125  1.34 80.00
139     49        46      00.18  2.74 27.00
140     51        45      00.04  1.05 72.00
141     51        50      00.09  2.21 162.0
142     52        37      00.07  0.82 13.19
143     52        55      00.11  1.33 21.38
144     54        53      00.35  4.11 69.87
145     55        54      00.13  1.51 25.72
146     56        55      00.13  2.13 22.14
147     57        56      00.08  1.28 13.42
148     58        57      00.02  0.26  4.34
149     59        58      00.06  0.92 11.30
150     60        57      00.08  1.12 14.76
151     60        59      00.04  0.46  7.80
152     61        60      00.23  3.63 38.04
153     63        58      00.07  0.82 13.89
154     63        62      00.04  0.43  7.29
155     63        64      00.16  4.35      1.060
156     65        62      00.04  0.43  7.29
157     65        64      00.16  4.35      1.060
158     66        56      00.08  1.29 13.82
159     66        65      00.09  1.01 17.23
160     67        66      00.18  2.17 36.60
161     68        67      00.09  0.94 17.10
162     27        53      03.20 32.00 41.00
163   99999
164 exlf newt crem qlim ctap
165 ULOG
166   2
167   NETS_NYPS_vb.his
168 ARQV INIC IMPR
169   SIM
170 AROV GRAV IMPR SUBS
171   01
172 ULOG
173   4
174   NETS_NYPS_vb.rel
175 RELA FILE 80CO RBAR RLIN
176 FIM
```

Figure A-2: Input file for entering the line data

Appendix B

In this appendix, the input file "*.dyn" with the dynamic data used for the eigenvalue calculation in the PacDyn software is presented. To run the PacDyn software, this file must be loaded together with the "*.his" output file provided by the ANAREDE software. In Figures B-1, B-2 and B-3 it is possible to see the entire "*.dyn" input file that was produced for the small-signal stability analysis of the 68-bus system.

Note that, in Figure B-1 the generators parameters are inserted. In Figure B-2, the block diagrams of the AVR and PSS are built, while in Figure B-3 controllers with their respective parameters are related to their corresponding generators.

```
001 TITU
002      ///              New-England / New-York Test System                ///
003      ///                                                                ///
004      ///                                                                ///
005 DSYS
006 #(freq) (base) (no) N P T V
007  60.000 100.00 0001 H Y N N
008 DGEN
009 #   0    |    1    |    2    |    3    |    4    |    5    |    6    |    7    |
010 #234567890123456789012345678901234567890123456789012345678901234567890123456789 0
011 #(Nb1)noRM(Base)(-HH-)(X'd-)(X'q-)(-Xd-)(-Xq-)(-Ra-)(T'd0)(T'q0)(Xp-)(-Sat-)(-DD-)(Frq)
012 #(Nb1)noUU(-X"d)(-X"q)(T"d0)(T"qo)(-Xl-)(-A--)(-B--)(-C--)(-Xt-)(-Rtr)(-Xtr)(-Str)
013    01    5100.0 42.00 0.031 0.0417 0.10  0.069 0.00  10.2   1.5        0.0    0.
014    01     0.025 0.025 0.05  0.035 0.0125
015    02    5100.0 30.20 0.0697 0.0933 0.295 0.282 0.00  6.560  1.5        0.0    0.
016    02     0.050 0.05  0.05  0.035 0.0350
017    03    5100.0 35.80 0.0531 0.0714 0.2495 0.237 0.00  5.700  1.5        0.0    0.
018    03     0.045 0.045 0.05  0.035 0.0304
019    04    5100.0 28.60 0.0436 0.0586 0.262 0.258 0.00  5.690  1.5        0.0    0.
020    04     0.035 0.035 0.05  0.035 0.0295
021    05    5100.0 26.0  0.066 0.0883 0.330 0.310 0.00  5.400  0.44       0.0    0.
022    05     0.050 0.05  0.05  0.035 0.0270
023    06    5100.0 34.8  0.050 0.0675 0.254 0.241 0.00  7.300  0.40       0.0    0.
024    06     0.040 0.04  0.05  0.035 0.0224
025    07    5100.0 26.4  0.049 0.0667 0.295 0.292 0.00  5.660  1.50       0.0    0.
026    07     0.040 0.04  0.05  0.035 0.0322
027    08    5100.0 24.3  0.057 0.0767 0.290 0.280 0.00  6.700  0.41       0.0    0.
028    08     0.045 0.045 0.05  0.035 0.0280
029    09    5100.0 34.5  0.057 0.0767 0.2106 0.205 0.00  4.790  1.96       0.0    0.
030    09     0.045 0.045 0.05  0.035 0.0298
031    10    5100.0 31.0  0.0457 0.0615 0.169 0.115 0.00  9.370  1.50       0.0    0.
032    10     0.040 0.04  0.05  0.035 0.0199
033    11    5100.0 28.2  0.018 0.0241 0.128 0.123 0.00  4.100  1.50       0.0    0.
034    11     0.012 0.012 0.05  0.035 0.0103
035    12    5100.0 92.3  0.031 0.0420 0.101 0.095 0.00  7.400  1.50       0.0    0.
036    12     0.025 0.025 0.05  0.035 0.022
037    13    5200.0 248.0 0.0055 0.0074 0.0296 0.0286 0.00  5.900  1.50       0.0    0.
038    13     0.004 0.004 0.05  0.035 0.003
039    14    5100.0 300.0 0.0029 0.0038 0.018 0.0173 0.00  4.100  1.50       0.0    0.
040    14     0.0023 0.0023 0.05  0.035 0.0017
041    15    5100.0 300.0 0.0029 0.0038 0.018 0.0173 0.00  4.100  1.50       0.0    0.
042    15     0.0023 0.0023 0.05  0.035 0.0017
043    16   R5200.0 225.0 0.0071 0.0095 0.0356 0.0334 0.00  7.800  1.50       0.0    0.
044    16     0.0055 0.0055 0.05  0.035 0.0041
045  -999
```

Figure B-1: Insertion of system data and definition of generator models.

```
046 DUDT
047 #(NUDC) (---Name---)
048    0001 AVR_DC4B
049 #Flag   (Nb) (Type) S(Vinp) (Vout) (---A----) (---B----) (---C----) (---D----) (---E----)
050            1 OUT     EFD    EFD     #BUS
051            2 IN      VB     VT      #BUS
052            3 IN      VREF   VREF    #BUS
053            4 IN      VPSS   VPSS    #BUS
054 #Flag   (Nb) (Type) S(Vinp) (Vout) (---A----) (---B----) (---C----) (---D----) (---E----)
055            5 LDLG    VT     X1      1          0          1          #Tr
056            6 SUM     VREF   X2
057                     -X1     X2
058                      VPSS   X2
059            7 LDLG    EFD    X3      0          #Kf        1          #Tf
060            8 SUM     X2     X4
061                     -X3     X4
062            9 GAIN    X4     X6      #Kp
063           10 LDLG    X4     X7      #Ki        0          0          1
064           11 LDLG    X4     X8      0          #Kd        1          #Td
065           12 SUM     X6     X5
066                      X7     X5
067                      X8     X5
068           13 LIM     X5     X9      #Vr_min    #Vr_max
069           14 GAIN    X9     X10     #Ka
070           15 LDLG    X10    X11     1          0          1          #Ta
071           16 LIM     X11    X12     #Efd_min   #Efd_max
072           17 GAIN    EFD    X14     #Bex
073           18 EXP     X14    X15     1          1          0
074           19 GAIN    X15    X16     #Aex
075           20 MULT    X16    X13
076                      EFD    X13
077           21 SUM     X12    X17
078                     -X13    X17
079           22 LDLG    X17    EFD     1          0          #Ke        #Te
080 (            DPAR                  (--Par---) (--Value-)
081              DPAR                   #BUS
082              DPAR                   #Tr
083              DPAR                   #Kf
084              DPAR                   #Tf
085              DPAR                   #Kp
086              DPAR                   #Ki
087              DPAR                   #Kd
088              DPAR                   #Td
089              DPAR                   #Vr_min
090              DPAR                   #Vr_max
091              DPAR                   #Ka
092              DPAR                   #Ta
093              DPAR                   #Efd_min
094              DPAR                   #Efd_max
095              DPAR                   #Bex
096              DPAR                   #Aex
097              DPAR                   #Ke
098              DPAR                   #Te
099 STOP
100 #(NUDC) (---Name---)
101    0002 AVR_STA1
102 #Flag   (Nb) (Type) S(Vinp) (Vout) (---A----) (---B----) (---C----) (---D----) (---E----)
103            1 OUT     EFD    EFD     #BUS
104            2 IN      VB     VT      #BUS
105            3 IN      VREF   VREF    #BUS
106            4 IN      VPSS   VPSS    #BUS
107 #Flag   (Nb) (Type) S(Vinp) (Vout) (---A----) (---B----) (---C----) (---D----) (---E----)
108            5 SUM     VREF   X2
109                     -X1     X2
110                      VPSS   X2
111            6 LDLG    VT     X1      1          0          1          #Tr
112            7 GAIN    X2     X3      #Ka
113            8 LIM     X3     EFD     #Efd_min   #Efd_max
114 (            DPAR                  (--Par---) (--Value-)
115              DPAR                   #BUS
116              DPAR                   #Tr
117              DPAR                   #Ka
118              DPAR                   #Efd_min
119              DPAR                   #Efd_max
120 STOP
```

```
121  #(NUDC) (---Name---)
122     0003 AVR_MANUAL
123  #Flag   (Nb) (Type) S(Vinp) (Vout) (---A----) (---B----) (---C----) (---D----) (---E----)
124             1 OUT     EFD    EFD     #BUS
125             3 IN      VREF   VREF    #BUS
126  #Flag   (Nb) (Type) S(Vinp) (Vout) (---A----) (---B----) (---C----) (---D----) (---E----)
127             4 GAIN    VREF   EFD     1
128   STOP
129  #(NUDC) (---Name---)
130     0004 PSS_two
131  #Flag   (Nb) (Type) S(Vinp) (Vout) (---A----) (---B----) (---C----) (---D----) (---E----)
132             1 IN      WW     WW      #BUS
133             2 OUT     VPSS   VPSS    #BUS
134  #Flag   (Nb) (Type) S(Vinp) (Vout) (---A----) (---B----) (---C----) (---D----) (---E----)
135             3 GAIN    WW     X1      #Kpss
136             4 LDLG    X1     X2      0          #Tw        1          #Tw
137             5 LDLG    X2     X3      1          #T1        1          #T2
138             6 LDLG    X3     X4      1          #T3        1          #T4
139             7 LIM     X4     VPSS    #Vpss_min  #Vpss_max
140  (            DPAR                  (--Par---) (--Value-)
141               DPAR                  #BUS
142               DPAR                  #Kpss
143               DPAR                  #Tw
144               DPAR                  #T1
145               DPAR                  #T2
146               DPAR                  #T3
147               DPAR                  #T4
148               DPAR                  #Vpss_min
149               DPAR                  #Vpss_max
150   STOP
151  #(NUDC) (---Name---)
152     0005 PSS_three
153  #Flag   (Nb) (Type) S(Vinp) (Vout) (---A----) (---B----) (---C----) (---D----) (---E----)
154             1 IN      WW     WW      #BUS
155             2 OUT     VPSS   VPSS    #BUS
156  #Flag   (Nb) (Type) S(Vinp) (Vout) (---A----) (---B----) (---C----) (---D----) (---E----)
157             3 GAIN    WW     X1      #Kpss
158             4 LDLG    X1     X2      0          #Tw        1          #Tw
159             5 LDLG    X2     X3      1          #T1        1          #T2
160             6 LDLG    X3     X4      1          #T3        1          #T4
161             7 LDLG    X4     X5      1          #T5        1          #T6
162             8 LIM     X5     VPSS    #Vpss_min  #Vpss_max
163  (            DPAR                  (--Par---) (--Value-)
164               DPAR                  #BUS
165               DPAR                  #Kpss
166               DPAR                  #Tw
167               DPAR                  #T1
168               DPAR                  #T2
169               DPAR                  #T3
170               DPAR                  #T4
171               DPAR                  #T5
172               DPAR                  #T6
173               DPAR                  #Vpss_min
174               DPAR                  #Vpss_max
175   STOP
176   -999
177  (
```

Figure B-2: Building of AVR and PSS model.

```
178 AUDC
179 #(No   ) (---NOME---) (No   ) (---NOME---)
180    0006 AVR_G1          0001  AVR_DC4B
181 #                                    (--NAME--) (-VALUE--)
182                                       #BUS       01
183                                       #Tr        0.01
184                                       #Kf        0.03
185                                       #Tf        1.0
186                                       #Kp        200.
187                                       #Ki        50.
188                                       #Kd        50.
189                                       #Td        0.01
190                                       #Vr_min    -10.
191                                       #Vr_max    10.
192                                       #Ka        1.0
193                                       #Ta        0.02
194                                       #Ke        1.0
195                                       #Te        0.785
196                                       #Efd_min   -10.
197                                       #Efd_max   10.
198                                       #Bex       1.9596
199                                       #Aex       0.0000319
200  STOP
201 #(No   ) (---NOME---) (No   ) (---NOME---)
202    0007 AVR_G2          0001  AVR_DC4B
203 #                                    (--NAME--) (-VALUE--)
204                                       #BUS       02
205                                       #Tr        0.01
206                                       #Kf        0.03
207                                       #Tf        1.0
208                                       #Kp        200.
209                                       #Ki        50.
210                                       #Kd        50.
211                                       #Td        0.01
212                                       #Vr_min    -10.
213                                       #Vr_max    10.
214                                       #Ka        1.0
215                                       #Ta        0.02
216                                       #Ke        1.0
217                                       #Te        0.785
218                                       #Efd_min   -10.
219                                       #Efd_max   10.
220                                       #Bex       1.9596
221                                       #Aex       0.0000319
222  STOP
223 #(No   ) (---NOME---) (No   ) (---NOME---)
224    0008 AVR_G3          0001  AVR_DC4B
225 #                                    (--NAME--) (-VALUE--)
226                                       #BUS       03
227                                       #Tr        0.01
228                                       #Kf        0.03
229                                       #Tf        1.0
230                                       #Kp        200.
231                                       #Ki        50.
232                                       #Kd        50.
233                                       #Td        0.01
234                                       #Vr_min    -10.
235                                       #Vr_max    10.
236                                       #Ka        1.0
237                                       #Ta        0.02
238                                       #Ke        1.0
239                                       #Te        0.785
240                                       #Efd_min   -10.
241                                       #Efd_max   10.
242                                       #Bex       1.9596
243                                       #Aex       0.0000319
244  STOP
```

```
245  #(No   ) (---NOME---) (No   ) (---NOME---)
246     0009 AVR_G4          0001  AVR_DC4B
247  #                                    (--NAME--) (-VALUE--)
248                                       #BUS       04
249                                       #Tr        0.01
250                                       #Kf        0.03
251                                       #Tf        1.0
252                                       #Kp        200.
253                                       #Ki        50.
254                                       #Kd        50.
255                                       #Td        0.01
256                                       #Vr_min    -10.
257                                       #Vr_max    10.
258                                       #Ka        1.0
259                                       #Ta        0.02
260                                       #Ke        1.0
261                                       #Te        0.785
262                                       #Efd_min   -10.
263                                       #Efd_max   10.
264                                       #Bex       1.9596
265                                       #Aex       0.0000319
266   STOP
267  #(No   ) (---NOME---) (No   ) (---NOME---)
268     0010 AVR_G5          0001  AVR_DC4B
269  #                                    (--NAME--) (-VALUE--)
270                                       #BUS       05
271                                       #Tr        0.01
272                                       #Kf        0.03
273                                       #Tf        1.0
274                                       #Kp        200.
275                                       #Ki        50.
276                                       #Kd        50.
277                                       #Td        0.01
278                                       #Vr_min    -10.
279                                       #Vr_max    10.
280                                       #Ka        1.0
281                                       #Ta        0.02
282                                       #Ke        1.0
283                                       #Te        0.785
284                                       #Efd_min   -10.
285                                       #Efd_max   10.
286                                       #Bex       1.9596
287                                       #Aex       0.00003190
288   STOP
289  #(No   ) (---NOME---) (No   ) (---NOME---)
290     0011 AVR_G6          0001  AVR_DC4B
291  #                                    (--NAME--) (-VALUE--)
292                                       #BUS       06
293                                       #Tr        0.01
294                                       #Kf        0.03
295                                       #Tf        1.0
296                                       #Kp        200.
297                                       #Ki        50.
298                                       #Kd        50.
299                                       #Td        0.01
300                                       #Vr_min    -10.
301                                       #Vr_max    10.
302                                       #Ka        1.0
303                                       #Ta        0.02
304                                       #Ke        1.0
305                                       #Te        0.785
306                                       #Efd_min   -10.
307                                       #Efd_max   10.
308                                       #Bex       1.9596
309                                       #Aex       0.0000319
310   STOP
```

```
311  #(No   ) (---NOME---) (No   ) (---NOME---)
312     0012 AVR_G7          0001  AVR_DC4B
313  #                                    (--NAME--) (-VALUE--)
314                                       #BUS       07
315                                       #Tr        0.01
316                                       #Kf        0.03
317                                       #Tf        1.0
318                                       #Kp        200.
319                                       #Ki        50.
320                                       #Kd        50.
321                                       #Td        0.01
322                                       #Vr_min    -10
323                                       #Vr_max    10
324                                       #Ka        1.0
325                                       #Ta        0.02
326                                       #Ke        1.0
327                                       #Te        0.785
328                                       #Efd_min   -10.
329                                       #Efd_max   10.
330                                       #Bex       1.9596
331                                       #Aex       0.00003190
332   STOP
333  #(No   ) (---NOME---) (No   ) (---NOME---)
334     0013 AVR_G8          0001  AVR_DC4B
335  #                                    (--NAME--) (-VALUE--)
336                                       #BUS       08
337                                       #Tr        0.01
338                                       #Kf        0.03
339                                       #Tf        1.0
340                                       #Kp        200.
341                                       #Ki        50.
342                                       #Kd        50.
343                                       #Td        0.01
344                                       #Vr_min    -10.
345                                       #Vr_max    10.
346                                       #Ka        1.0
347                                       #Ta        0.02
348                                       #Ke        1.0
349                                       #Te        0.785
350                                       #Efd_min   -10.
351                                       #Efd_max   10.
352                                       #Bex       1.9596
353                                       #Aex       0.0000319
354   STOP
355  #(No   ) (---NOME---) (No   ) (---NOME---)
356     0014 AVR_G9          0002  AVR_ST1A
357  #                                    (--NAME--) (-VALUE--)
358                                       #BUS       09
359                                       #Tr        0.01
360                                       #Ka        200.
361                                       #Efd_min   -5.
362                                       #Efd_max   5.
363   STOP
364  #(No   ) (---NOME---) (No   ) (---NOME---)
365     0015 AVR_G10         0001  AVR_DC4B
366  #                                    (--NAME--) (-VALUE--)
367                                       #BUS       10
368                                       #Tr        0.01
369                                       #Kf        0.03
370                                       #Tf        1.0
371                                       #Kp        200.
372                                       #Ki        50.
373                                       #Kd        50.
374                                       #Td        0.01
375                                       #Vr_min    -10.
376                                       #Vr_max    10.
```

```
                                        #Ka         1.0
                                        #Ta         0.02
                                        #Ke         1.0
                                        #Te         0.785
                                        #Efd_min    -10.
                                        #Efd_max    10.
                                        #Bex        1.9596
                                        #Aex        0.0000319
 STOP
#(No   ) (---NOME---) (No   ) (---NOME---)
   0016 AVR_G11         0001  AVR_DC4B
#                                      (--NAME--) (-VALUE--)
                                        #BUS        11
                                        #Tr         0.01
                                        #Kf         0.03
                                        #Tf         1.0
                                        #Kp         200.
                                        #Ki         50.
                                        #Kd         50.
                                        #Td         0.01
                                        #Vr_min     -10.
                                        #Vr_max     10.
                                        #Ka         1.0
                                        #Ta         0.02
                                        #Ke         1.0
                                        #Te         0.785
                                        #Efd_min    -10
                                        #Efd_max    10
                                        #Bex        1.9596
                                        #Aex        0.0000319
 STOP
#(No   ) (---NOME---) (No   ) (---NOME---)
   0017 AVR_G12         0001  AVR_DC4B
#                                       (--NAME--) (-VALUE--)
                                         #BUS        12
                                         #Tr         0.01
                                         #Kf         0.03
                                         #Tf         1.0
                                         #Kp         200.
                                         #Ki         50.
                                         #Kd         50.
                                         #Td         0.01
                                         #Vr_min     -10.
                                         #Vr_max     10.
                                         #Ka         1.0
                                         #Ta         0.02
                                         #Ke         1.0
                                         #Te         0.785
                                         #Efd_min    -10.
                                         #Efd_max    10.
                                         #Bex        1.9596
                                         #Aex        0.0000319
 STOP
#(No   ) (---NOME---) (No   ) (---NOME---)
   0018 AVR_G13         0003  AVR_MANUAL
#                                       (--NAME--) (-VALUE--)
                                         #BUS        13
 STOP
#(No   ) (---NOME---) (No   ) (---NOME---)
   0019 AVR_G14         0003  AVR_MANUAL
#                                       (--NAME--) (-VALUE--)
                                         #BUS        14
 STOP
#(No   ) (---NOME---) (No   ) (---NOME---)
   0020 AVR_G15         0003  AVR_MANUAL
#                                       (--NAME--) (-VALUE--)
                                         #BUS        15
```

```
444  STOP
445  #(No   ) (---NOME---) (No   ) (---NOME---)
446     0021 AVR_G16         0003  AVR_MANUAL
447  #                                    (--NAME--) (-VALUE--)
448                                       #BUS       16
449  STOP
450  #(No   ) (---NOME---) (No   ) (---NOME---)
451     0022 PSS_G1          0005 PSS_three
452  #                                    (--NAME--) (-VALUE--)
453                                       #BUS       01
454                                       #Kpss      20
455                                       #Tw        15
456                                       #T1        0.15
457                                       #T2        0.04
458                                       #T3        0.15
459                                       #T4        0.04
460                                       #T5        0.15
461                                       #T6        0.04
462                                       #Vpss_min -0.05
463                                       #Vpss_max  0.2
464  STOP
465  #(No   ) (---NOME---) (No   ) (---NOME---)
466     0023 PSS_G2          0005 PSS_three
467  #                                    (--NAME--) (-VALUE--)
468                                       #BUS       02
469                                       #Kpss      20
470                                       #Tw        15
471                                       #T1        0.15
472                                       #T2        0.04
473                                       #T3        0.15
474                                       #T4        0.04
475                                       #T5        0.15
476                                       #T6        0.04
477                                      #Vpss_min -0.05
478                                      #Vpss_max  0.2
479  STOP
480  #(No   ) (---NOME---) (No   ) (---NOME---)
481     0024 PSS_G3          0005 PSS_three
482  #                                   (--NAME--) (-VALUE--)
483                                      #BUS       03
484                                      #Kpss      20
485                                      #Tw        15
486                                      #T1        0.15
487                                      #T2        0.04
488                                      #T3        0.15
489                                      #T4        0.04
490                                      #T5        0.15
491                                      #T6        0.04
492                                      #Vpss_min -0.05
493                                      #Vpss_max  0.2
494  STOP
495  #(No   ) (---NOME---) (No   ) (---NOME---)
496     0025 PSS_G4          0005 PSS_three
497  #                                   (--NAME--) (-VALUE--)
498                                      #BUS       04
499                                      #Kpss      20
500                                      #Tw        15
501                                      #T1        0.15
502                                      #T2        0.04
503                                      #T3        0.15
504                                      #T4        0.04
505                                      #T5        0.15
506                                      #T6        0.04
507                                      #Vpss_min -0.05
508                                      #Vpss_max  0.2
509  STOP
510  #(No   ) (---NOME---) (No   ) (---NOME---)
```

```
511     0026 PSS_G5          0005 PSS_three
512  #                                    (--NAME--)  (-VALUE--)
513                                       #BUS        05
514                                       #Kpss       20
515                                       #Tw         15
516                                       #T1         0.15
517                                       #T2         0.04
518                                       #T3         0.15
519                                       #T4         0.04
520                                       #T5         0.15
521                                       #T6         0.04
522                                       #Vpss_min  -0.05
523                                       #Vpss_max   0.2
524   STOP
525  #(No   )  (---NOME---)  (No   )  (---NOME---)
526     0027 PSS_G6          0005 PSS_three
527  #                                    (--NAME--)  (-VALUE--)
528                                       #BUS        06
529                                       #Kpss       20
530                                       #Tw         15
531                                       #T1         0.15
532                                       #T2         0.04
533                                       #T3         0.15
534                                       #T4         0.04
535                                       #T5         0.15
536                                       #T6         0.04
537                                       #Vpss_min  -0.05
538                                       #Vpss_max   0.2
539   STOP
540  #(No   )  (---NOME---)  (No   )  (---NOME---)
541     0028 PSS_G7          0005 PSS_three
542  #                                    (--NAME--)  (-VALUE--)
543                                       #BUS        07
544                                       #Kpss       20
545                                       #Tw         15
546                                       #T1         0.15
547                                       #T2         0.04
548                                       #T3         0.15
549                                       #T4         0.04
550                                       #T5         0.15
551                                       #T6         0.04
552                                       #Vpss_min  -0.05
553                                       #Vpss_max   0.2
554   STOP
555  #(No   )  (---NOME---)  (No   )  (---NOME---)
556     0029 PSS_G8          0005 PSS_three
557  #                                    (--NAME--)  (-VALUE--)
558                                       #BUS        08
559                                       #Kpss       20
560                                       #Tw         15
561                                       #T1         0.15
562                                       #T2         0.04
563                                       #T3         0.15
564                                       #T4         0.04
565                                       #T5         0.15
566                                       #T6         0.04
567                                       #Vpss_min  -0.05
568                                       #Vpss_max   0.2
569   STOP
570  #(No   )  (---NOME---)  (No   )  (---NOME---)
571     0030 PSS_G9          0004  PSS_two
572  #                                    (--NAME--)  (-VALUE--)
573                                       #BUS        09
574                                       #Kpss       12
575                                       #Tw         10
576                                       #T1         0.09
```

```
                                        #T2         0.02
                                        #T3         0.09
                                        #T4         0.02
                                        #Vpss_min -0.05
                                        #Vpss_max  0.2
  STOP
#(No   ) (---NOME---) (No   ) (---NOME---)
   0031 PSS_G10        0005 PSS_three
#                                      (--NAME--) (-VALUE--)
                                        #BUS        10
                                        #Kpss       20
                                        #Tw         15
                                        #T1         0.15
                                        #T2         0.04
                                        #T3         0.15
                                        #T4         0.04
                                        #T5         0.15
                                        #T6         0.04
                                        #Vpss_min -0.05
                                        #Vpss_max  0.2
  STOP
#(No   ) (---NOME---) (No   ) (---NOME---)
   0032 PSS_G11        0005 PSS_three
#                                      (--NAME--) (-VALUE--)
                                        #BUS        11
                                        #Kpss       20
                                        #Tw         15
                                        #T1         0.15
                                        #T2         0.04
                                        #T3         0.15
                                        #T4         0.04
                                        #T5         0.15
                                        #T6         0.04
                                        #Vpss_min -0.05
                                        #Vpss_max  0.2
  STOP
#(No   ) (---NOME---) (No   ) (---NOME---)
   0033 PSS_G12        0005 PSS_three
#                                      (--NAME--) (-VALUE--)
                                        #BUS        12
                                        #Kpss       20
                                        #Tw         15
                                        #T1         0.15
                                        #T2         0.04
                                        #T3         0.15
                                        #T4         0.04
                                        #T5         0.15
                                        #T6         0.04
                                        #Vpss_min -0.05
                                        #Vpss_max  0.2
  STOP
  -999
END
```

Figure B-3: Association of AVRs to their respective generators and insertion of the corresponding parameters.

Appendix C

The main input file 68bus_ANATEM.STB used in the ANATEM software for nonlinear simulation of the NETS-NYPS 68 Bus system is given in Figures C-1.

In this file, the associations with the files of steady-state operation (*.sav) from ANAREDE, pre-defined machine models (*.blt) and user-defined controllers (*.cdu) are depicted. This main file also contains the data for the applied perturbation and the association with the output file (*.plt) that contains the output variables of interest.

```
001  (==========================================================================
002  ( TITULO DO CASO
003  (==========================================================================
004  TITU
005  16 GENERATOR 68 BUS SYSTEM
006  (
007  (==========================================================================
008  ( ASSOCIACAO DE ARQUIVO COM FLUXO DE POTENCIA ( ANAREDE )
009  (==========================================================================
010  ULOG
011  2
012  NETS_NYPS_VB.HIS
013  (==========================================================================
014  ( RESTABELECIMENTO DO CASO DE FLUXO DE POTENCIA:
015  (==========================================================================
016  ARQV REST IMPR
017  1
018  (
019  (==========================================================================
020  ( ASSOCIACAO DE ARQUIVO PARA SAIDA DE RELATORIOS ( opcao FILE ):
021  (==========================================================================
022  ULOG
023  4
024  NETS_NYPS_VB.out
025  ((
026  ((=========================================================================
027  (( ASSOCIACAO DE ARQUIVO COM DADOS PARA PLOTAGEM:
028  ((=========================================================================
029  ULOG
030  8
031  NETS_NYPS_VB.txt
032  (
033  ((=========================================================================
034  ( DADOS DE PADRAO PARA OPCOES DE EXECUCAO
035  (==========================================================================
036  DOPC IMPR CONT
037  (Op) E (Op) E (Op) E (Op) E (Op) E (Op) E (Op) E (Op) E (Op) E (Op) E
038  IMPR   FILE   80CO   CONT
039  999999
040  (
041  (==========================================================================
042  ( ALTERACAO DE CONSTANTES DO PROGRAMA
043  (==========================================================================
044  DCTE
045  (Ct) (Val )
046  TEPQ    .01   ( tolerancia de convergencia exigida p/ fluxo de potencia )
047  TEMD  1.E-6
048  TETE  1.E-6
049  TABS  1.E-6   ( tolerancia absoluta )
050  999999
051  (
052  (==========================================================================
053  ( ASSOCIACAO DE ARQUIVO COM MODELOS DE REGULADORES (ANATEM)
054  (==========================================================================
055  (
056  ulog
057  3
058  16GENERATOR.blt
059  ARQM
060  ULOG
061  3
062  16GENERATOR.cdu
063  ARQM
064  (
065  (
066  (==========================================================================
```

```
067   ( ASSOCIACAO DE MAQUINAS COM MODELOS
068   (==============================================================================
069 ⊟ DMAQ
070   ( Nb)    Gr (P) (Q) Und ( Mg ) ( Mt )u( Mv )u( Me )u(Xvd)(Nbc)        Caso sem PSSs
071   (     1   10                0001   1001u
072   (     2   10                0002   1002u
073   (     3   10                0003   1003u
074   (     4   10                0004   1004u
075   (     5   10                0005   1005u
076   (     6   10                0006   1006u
077   (     7   10                0007   1007u
078   (     8   10                0008   1008u
079   (     9   10                0009   1009u
080   (    10   10                0010   1010u
081   (    11   10                0011   1011u
082   (    12   10                0012   1012u
083   (    13   10                0013
084   (    14   10                0014
085   (    15   10                0015
086   (    16   10                0016
087   (999999
088   ( Nb)    Gr (P) (Q) Und ( Mg ) ( Mt )u( Mv )u( Me )u(Xvd)(Nbc)        Caso com PSSs
089       1   10                0001   1001u          1101u
090       2   10                0002   1002u          1102u
091       3   10                0003   1003u          1103u
092       4   10                0004   1004u          1104u
093       5   10                0005   1005u          1105u
094       6   10                0006   1006u          1106u
095       7   10                0007   1007u          1107u
096       8   10                0008   1008u          1108u
097       9   10                0009   1009u          1109u
098      10   10                0010   1010u          1110u
099      11   10                0011   1011u          1111u
100      12   10                0012   1012u          1112u
101      13   10                0013
102      14   10                0014
103      15   10                0015
104      16   10                0016
105   └ 999999
106   (
107   (==============================================================================
108   ( EVENTOS
109   (==============================================================================
110   ( dEGRAU NO REGULADOR DE TENSÃO DE 0.01 PU   - naO DEU CERTO
111   (
112 ⊟ DEVT IMPR
113   (   0    |    1    |    2    |    3    |    4    |    5    |    6    |    7    |
114   (234567890123456789012345678901234567890123456789012345678901234567890123456789 0
115   TCDU     1.0   1003              2.0                        0001
116   TCDU    11.0   1003             -2.0                        0001
117   └ 999999
118   (
119   (==============================================================================
120   ( VARIAVEIS DE SAIDA
121   (==============================================================================
122 ⊟ DPLT IMPR
123   (Tipo)M( El ) ( Pa) Nc Gp ( Br) Gr ( Ex) (Bl) P
124   FMAQ      15           10
125   FMAQ      16           10
126   └ 999999
127   (
128   (==============================================================================
129   ( DADOS DE SIMULACAO
130   (==============================================================================
131 ⊟ DSIM
132   ( Tmax ) (Stp) ( P ) ( I )
133   └  20     .0008     1     1
134   (
135   (==============================================================================
136   ( EXECUCAO DO CASO
137   (==============================================================================
138   EXSI ECHO
139   (
140   (
141   FIM
```

Figure C-1: Main file (*.stb).

The input file 16GENERATOR.blt that is used in the ANATEM software for nonlinear simulation of the NETS-NYPS 68 Bus system in given in Figure C-2.

```
001  (*************************************************************
002  (*                                                           *
003  (*          DADOS DE MODELOS DE MAQUINAS SINCRONAS           *
004  (*                                                           *
005  (*************************************************************
006  (
007  (=====================================================================
008  ( GERADORES 1 a 10
009  (=====================================================================
010  DMDG MD03
011  (
012  (-------------
013  (- G1 a G16 -
014  (-------------
015  (No)    (CS)  (Ld )(Lq )(L'd)(L'q)(L"d)(Ll )(T'd)(T'q)(T"d)(T"q)
016  (             (%)  (%)  (%)  (%)  (%)  (%)  (s)  (s)  (s)  (s)  (UNID.)
017  0001          10.0 6.9  3.1  4.17 2.5 1.25  10.2 1.5  .05 .035
018  (No)    (Ra )( H )( D )(MVA)Fr C
019  (        (%)  (s)  (pu)                                          (UNID.)
020  0001     0    42   0.0  100
021  (No)    (CS)  (Ld )(Lq )(L'd)(L'q)(L"d)(Ll )(T'd)(T'q)(T"d)(T"q)
022  (             (%)  (%)  (%)  (%)  (%)  (%)  (s)  (s)  (s)  (s)  (UNID.)
023  0002         29.5 28.2 6.97  9.33 5.0  3.50 6.56 1.5  .05  .035
024  (No)    (Ra )( H )( D )(MVA)Fr C
025  (        (%)  (s)  (pu)
026  0002     0   30.2  0.0  100
027  (No)    (CS)  (Ld )(Lq )(L'd)(L'q)(L"d)(Ll )(T'd)(T'q)(T"d)(T"q)
028  (             (%)  (%)  (%)  (%)  (%)  (%)  (s)  (s)  (s)  (s)  (UNID.)
029  0003         24.9523.7 5.31 7.14 4.50 3.04  5.7  1.5  .05 .035
030  (No)    (Ra )( H )( D )(MVA)Fr C
031  (        (%)  (s)  (pu)
032  0003     0   35.8  0.0  100
033  (No)    (CS)  (Ld )(Lq )(L'd)(L'q)(L"d)(Ll )(T'd)(T'q)(T"d)(T"q)
034  (             (%)  (%)  (%)  (%)  (%)  (%)  (s)  (s)  (s)  (s)  (UNID.)
035  0004          26.2 25.8 4.36 5.86 3.50 2.95 5.69  1.5 .05  .035
036  (No)    (Ra )( H )( D )(MVA)Fr C
037  (        (%)  (s)  (pu)
038  0004      0  28.6  0.0  100
039  (No)    (CS)  (Ld )(Lq )(L'd)(L'q)(L"d)(Ll )(T'd)(T'q)(T"d)(T"q)
040  (             (%)  (%)  (%)  (%)  (%)  (%)  (s)  (s)  (s)  (s)  (UNID.)
041  0005          33  31.0  6.6 8.83  5.0  2.70 5.4  0.44 .05  .035
042  (No)    (Ra )( H )( D )(MVA)Fr C
043  (        (%)  (s)  (pu)
044  0005      0   26   0.0   100
045  (No)    (CS)  (Ld )(Lq )(L'd)(L'q)(L"d)(Ll )(T'd)(T'q)(T"d)(T"q)
046  (             (%)  (%)  (%)  (%)  (%)  (%)  (s)  (s)  (s)  (s)  (UNID.)
047  0006          25.4 24.1 5.0  6.75 4.00 2.24 7.3 0.40 .050 .035
048  (No)    (Ra )( H )( D )(MVA)Fr C
049  (        (%)  (s)  (pu)
050  0006      0  34.8  0.0  100
051  (No)    (CS)  (Ld )(Lq )(L'd)(L'q)(L"d)(Ll )(T'd)(T'q)(T"d)(T"q)
052  (             (%)  (%)  (%)  (%)  (%)  (%)  (s)  (s)  (s)  (s)  (UNID.)
053  0007          29.5 29.2 4.9 6.67  4.00 3.22 5.66 1.50 .050 .035
054  (No)    (Ra )( H )( D )(MVA)Fr C
055  (        (%)  (s)  (pu)
056  0007      0  26.4  0.0  100
057  (No)    (CS)  (Ld )(Lq )(L'd)(L'q)(L"d)(Ll )(T'd)(T'q)(T"d)(T"q)
058  (             (%)  (%)  (%)  (%)  (%)  (%)  (s)  (s)  (s)  (s)  (UNID.)
059  0008          29   28   5.7  7.67 4.50 2.80  6.7 0.41 .050 .035
060  (No)    (Ra )( H )( D )(MVA)Fr C
061  (        (%)  (s)  (pu)
062  0008      0  24.3  0.0  100
063  (No)    (CS)  (Ld )(Lq )(L'd)(L'q)(L"d)(Ll )(T'd)(T'q)(T"d)(T"q)
064  (             (%)  (%)  (%)  (%)  (%)  (%)  (s)  (s)  (s)  (s)  (UNID.)
065  0009         21.06 20.5 5.7  7.67 4.50 2.98 4.79 1.96 .050 .035
066  (No)    (Ra )( H )( D )(MVA)Fr C
067  (        (%)  (s)  (pu)
```

```
0009      0    34.5 0.0  100
(No)    (CS)  (Ld ) (Lq ) (L'd) (L'q) (L"d) (Ll ) (T'd) (T'q) (T"d) (T"q)
(              (%)   (%)   (%)   (%)   (%)   (%)   (s)   (s)   (s)   (s)   (UNID.)
0010          16.9  11.5 4.57 6.15 4.0 1.99 9.37  1.5 .050 .035
(No)    (Ra ) ( H ) ( D ) (MVA) Fr C
(        (%)   (s)  (pu)
0010      0    31.0 0.0  100
(No)    (CS)  (Ld ) (Lq ) (L'd) (L'q) (L"d) (Ll ) (T'd) (T'q) (T"d) (T"q)
(              (%)   (%)   (%)   (%)   (%)   (%)   (s)   (s)   (s)   (s)   (UNID.)
0011          12.8  12.3 1.80 2.41 1.2 1.03  4.10 1.5 .050 .035
(No)    (Ra ) ( H ) ( D ) (MVA) Fr C
(        (%)   (s)  (pu)
0011      0    28.2 0.0 100
(No)    (CS)  (Ld ) (Lq ) (L'd) (L'q) (L"d) (Ll ) (T'd) (T'q) (T"d) (T"q)
(              (%)   (%)   (%)   (%)   (%)   (%)   (s)   (s)   (s)   (s)   (UNID.)
0012          10.1  9.5  3.10 4.20 2.50 2.20 7.4  1.5 .050 .035
(No)    (Ra ) ( H ) ( D ) (MVA) Fr C
(        (%)   (s)  (pu)
0012      0    92.3 0.0  100
(No)    (CS)  (Ld ) (Lq ) (L'd) (L'q) (L"d) (Ll ) (T'd) (T'q) (T"d) (T"q)
(              (%)   (%)   (%)   (%)   (%)   (%)   (s)   (s)   (s)   (s)   (UNID.)
0013          2.96  2.86 0.55 0.74 0.4 0.30  5.9  1.5 .050 .035
(No)    (Ra ) ( H ) ( D ) (MVA) Fr C
(        (%)   (s)  (pu)
0013      0    248  0.0  200
(No)    (CS)  (Ld ) (Lq ) (L'd) (L'q) (L"d) (Ll ) (T'd) (T'q) (T"d) (T"q)
(              (%)   (%)   (%)   (%)   (%)   (%)   (s)   (s)   (s)   (s)   (UNID.)
0014          1.80  1.73 0.29 0.38 0.23 0.17 4.1  1.5 .050 .035
(No)    (Ra ) ( H ) ( D ) (MVA) Fr C
(        (%)   (s)  (pu)
0014      0    300  0.0  100
(No)    (CS)  (Ld ) (Lq ) (L'd) (L'q) (L"d) (Ll ) (T'd) (T'q) (T"d) (T"q)
(              (%)   (%)   (%)   (%)   (%)   (%)   (s)   (s)   (s)   (s)   (UNID.)
0015          1.80  1.73 0.29 0.38 0.23 0.17 4.1  1.5 .050 .035
(No)    (Ra ) ( H ) ( D ) (MVA) Fr C
(        (%)   (s)  (pu)
0015      0    300  0.0  100
(No)    (CS)  (Ld ) (Lq ) (L'd) (L'q) (L"d) (Ll ) (T'd) (T'q) (T"d) (T"q)
(              (%)   (%)   (%)   (%)   (%)   (%)   (s)   (s)   (s)   (s)   (UNID.)
0016          3.56  3.34 0.71 0.950.55 0.41  7.8  1.5  .05 .035
(No)    (Ra ) ( H ) ( D ) (MVA) Fr C
(        (%)   (s)  (pu)
0016      0    225  0.0  200
999999
FIM
```

Figure C-2: File with the generator models (*.blt)

The file 16GENERATOR.cdu that is used in the ANATEM software for defining the controller models is given from Figure C-1.

```
001  ( ************************************************************************
002  ( *                                                                      *
003  ( *  ARQUIVO ........ 16GENERATOR.cdu                                   *
004  ( *                                                                      *
005  ( *  FORMATO ........ ANATEM                                            *
006  ( *                                                                      *
007  ( ************************************************************************
008  (=========================================================================
009  (=========================================================================
010  ( REGULADORES DE TENSAO
011  (=========================================================================
012  (
013  (AVR DO GERADOR 1 A 8 : AVR TYPE DC4B
014  DCDU
015  (ncdu) ( nome cdu )
016    1001 AVR_G1
017  (EFPAR (nome) (     valor      )
018  DEFPAR #Tr                  0.01
019  DEFPAR #Kf                  0.03
020  DEFPAR #Tf                   1.0
021  DEFPAR #Kp                  200.
022  DEFPAR #Ki                   50.
023  DEFPAR #Kd                   50.
024  DEFPAR #Td                  0.01
025  DEFPAR #Ka                   1.0
026  DEFPAR #Ta                  0.02
027  DEFPAR #Bex               1.9596
028  DEFPAR #Aex            0.0000319
029  DEFPAR #Ke                   1.0
030  DEFPAR #Te                 0.785
031  (
032  (nb)i(tipo) (stip)s(vent) (vsai) ( p1 )( p2 )( p3 )( p4 ) (vmin) (vmax)
033  0001 ENTRAD               VREF
034  0002 IMPORT   VTR         VT
035  0003 IMPORT   VSAD        VPSS
036  0004 LEDLAG        VT     X1     1     0     1     #Tr
037  0005 SOMA          VREF   X2
038                    -X1     X2
039                    VPSS    X2
040  0006 WSHOUT        EFD    X3     #Kf   1     #Tf
041  0007 SOMA          X2     X4
042                    -X3     X4
043  0008 GANHO         X4     X6     #Kp
044  0009 PROINT        X4     X7     #Ki   0     1
045  0010 WSHOUT        X4     X8     #Kd   1     #Td
046  0011 SOMA          X6     X5
047                     X7     X5
048                     X8     X5
049  0012 LIMITA        X5     X9                        Vrmin  Vrmax
050  0013 GANHO         X9     X10    #Ka
051  0014 LEDLAG        X10    X11    1     0     1     #Ta
052  0015 LIMITA        X11    X12                       Efdmin Efdmax
053  0016 GANHO         EFD    X14    #Bex
054  0017 FUNCAO  EXP   X14    X15    1     1
055  0018 GANHO         X15    X16    #Aex
056  0019 MULTPL        X16    X13
057                     EFD    X13
058  0020 SOMA          X12    X17
059                    -X13    X17
060  0021 LEDLAG        X17    EFD    1     0     #Ke   #Te
061  0022 EXPORT  EFD   EFD
062  (
```

```
064  DEFVAL        Vrmin  -10.0
065  DEFVAL        Vrmax   10.0
066  DEFVAL        Efdmin -10.0
067  DEFVAL        Efdmax  10.0
068  FIMCDU
069  (*********************************************************************
070  (ncdu) ( nome cdu )
071    1002 AVR_G2
072  (EFPAR (nome) (     valor      )
073  DEFPAR #Tr                  0.01
074  DEFPAR #Kf                  0.03
075  DEFPAR #Tf                   1.0
076  DEFPAR #Kp                  200.
077  DEFPAR #Ki                   50.
078  DEFPAR #Kd                   50.
079  DEFPAR #Td                  0.01
080  DEFPAR #Ka                   1.0
081  DEFPAR #Ta                  0.02
082  DEFPAR #Bex               1.9596
083  DEFPAR #Aex            0.0000319
084  DEFPAR #Ke                   1.0
085  DEFPAR #Te                 0.785
086  (
087  (nb)i(tipo) (stip)s(vent) (vsai) ( p1 )( p2 )( p3 )( p4 ) (vmin) (vmax)
088  0001 ENTRAD               VREF
089  0002 IMPORT   VTR         VT
090  0003 IMPORT   VSAD        VPSS
091  0004 LEDLAG        VT     X1     1     0     1     #Tr
092  0005 SOMA          VREF   X2
093                    -X1     X2
094                    VPSS    X2
095  0006 WSHOUT       EFD     X3     #Kf   1     #Tf
096  0007 SOMA          X2     X4
097                    -X3     X4
098  0008 GANHO         X4     X6     #Kp
099  0009 PROINT        X4     X7     #Ki   0     1
100  0010 WSHOUT        X4     X8     #Kd   1     #Td
101  0011 SOMA          X6     X5
102                     X7     X5
103                     X8     X5
104  0012 LIMITA        X5     X9                          Vrmin  Vrmax
105  0013 GANHO         X9     X10    #Ka
106  0014 LEDLAG        X10    X11    1     0     1     #Ta
107  0015 LIMITA        X11    X12                         Efdmin Efdmax
108  0016 GANHO         EFD    X14    #Bex
109  0017 FUNCAO  EXP   X14    X15    1     1
110  0018 GANHO         X15    X16    #Aex
111  0019 MULTPL        X16    X13
112                     EFD    X13
113  0020 SOMA          X12    X17
114                    -X13    X17
115  0021 LEDLAG        X17    EFD    1     0     #Ke   #Te
116  0022 EXPORT  EFD   EFD
117  (
118  (DEFVA (stip) (vdef) ( d1 )
119  DEFVAL        Vrmin  -10.0
120  DEFVAL        Vrmax   10.0
121  DEFVAL        Efdmin -10.0
122  DEFVAL        Efdmax  10.0
123  FIMCDU
124  (*********************************************************************
125  (ncdu) ( nome cdu )
126    1003 AVR_G3
127  (EFPAR (nome) (     valor      )
128  DEFPAR #Tr                  0.01
```

```
129  DEFPAR #Kf                  0.03
130  DEFPAR #Tf                   1.0
131  DEFPAR #Kp                  200.
132  DEFPAR #Ki                   50.
133  DEFPAR #Kd                   50.
134  DEFPAR #Td                  0.01
135  DEFPAR #Ka                   1.0
136  DEFPAR #Ta                  0.02
137  DEFPAR #Bex               1.9596
138  DEFPAR #Aex            0.0000319
139  DEFPAR #Ke                   1.0
140  DEFPAR #Te                 0.785
141  (
142  (nb)i(tipo) (stip)s(vent) (vsai) ( p1 )( p2 )( p3 )( p4 ) (vmin) (vmax)
143  0001 ENTRAD               VREF
144  0002 IMPORT   VTR         VT
145  0003 IMPORT   VSAD        VPSS
146  0004 LEDLAG        VT     X1     1     0     1     #Tr
147  0005 SOMA          VREF   X2
148                    -X1     X2
149                    VPSS    X2
150  0006 WSHOUT        EFD    X3     #Kf   1     #Tf
151  0007 SOMA          X2     X4
152                    -X3     X4
153  0008 GANHO         X4     X6     #Kp
154  0009 PROINT        X4     X7     #Ki   0     1
155  0010 WSHOUT        X4     X8     #Kd   1     #Td
156  0011 SOMA          X6     X5
157                     X7     X5
158                     X8     X5
159  0012 LIMITA        X5     X9                          Vrmin  Vrmax
160  0013 GANHO         X9     X10    #Ka
161  0014 LEDLAG        X10    X11    1     0     1     #Ta
162  0015 LIMITA        X11    X12                         Efdmin Efdmax
163  0016 GANHO         EFD    X14    #Bex
164  0017 FUNCAO  EXP   X14    X15    1     1
165  0018 GANHO         X15    X16    #Aex
166  0019 MULTPL        X16    X13
167                     EFD    X13
168  0020 SOMA          X12    X17
169                    -X13    X17
170  0021 LEDLAG        X17    EFD    1     0     #Ke   #Te
171  0022 EXPORT  EFD   EFD
172  (
173  (DEFVA (stip) (vdef) ( d1 )
174  DEFVAL        Vrmin  -10.0
175  DEFVAL        Vrmax   10.0
176  DEFVAL        Efdmin -10.0
177  DEFVAL        Efdmax  10.0
178  FIMCDU
179  (**********************************************************************
180  (ncdu) ( nome cdu )
181    1004 AVR_G4
182  (EFPAR (nome) (     valor      )
183  DEFPAR #Tr                  0.01
184  DEFPAR #Kf                  0.03
185  DEFPAR #Tf                   1.0
186  DEFPAR #Kp                  200.
187  DEFPAR #Ki                   50.
188  DEFPAR #Kd                   50.
189  DEFPAR #Td                  0.01
190  DEFPAR #Ka                   1.0
191  DEFPAR #Ta                  0.02
192  DEFPAR #Bex               1.9596
193  DEFPAR #Aex            0.0000319
194  DEFPAR #Ke                   1.0
```

```
195  DEFPAR #Te                  0.785
196  (
197  (nb)i(tipo) (stip)s(vent) (vsai) ( p1 )( p2 )( p3 )( p4 ) (vmin) (vmax)
198  0001 ENTRAD                VREF
199  0002 IMPORT   VTR          VT
200  0003 IMPORT   VSAD         VPSS
201  0004 LEDLAG        VT      X1      1      0      1      #Tr
202  0005 SOMA          VREF    X2
203                    -X1      X2
204                     VPSS    X2
205  0006 WSHOUT        EFD     X3      #Kf    1      #Tf
206  0007 SOMA          X2      X4
207                    -X3      X4
208  0008 GANHO         X4      X6      #Kp
209  0009 PROINT        X4      X7      #Ki    0      1
210  0010 WSHOUT        X4      X8      #Kd    1      #Td
211  0011 SOMA          X6      X5
212                     X7      X5
213                     X8      X5
214  0012 LIMITA        X5      X9                            Vrmin  Vrmax
215  0013 GANHO         X9      X10     #Ka
216  0014 LEDLAG        X10     X11     1      0      1      #Ta
217  0015 LIMITA        X11     X12                           Efdmin Efdmax
218  0016 GANHO         EFD     X14     #Bex
219  0017 FUNCAO  EXP   X14     X15     1      1
220  0018 GANHO         X15     X16     #Aex
221  0019 MULTPL        X16     X13
222                     EFD     X13
223  0020 SOMA          X12     X17
224                    -X13     X17
225  0021 LEDLAG        X17     EFD     1      0      #Ke    #Te
226  0022 EXPORT  EFD   EFD
227  (
228  (DEFVA (stip) (vdef) ( d1 )
229  DEFVAL        Vrmin  -10.0
230  DEFVAL        Vrmax   10.0
231  DEFVAL        Efdmin -10.0
232  DEFVAL        Efdmax  10.0
233  FIMCDU
234  (*********************************************************************
235  (ncdu) ( nome cdu )
236    1005 AVR_G5
237  (EFPAR (nome) (     valor      )
238  DEFPAR #Tr                 0.01
239  DEFPAR #Kf                 0.03
240  DEFPAR #Tf                  1.0
241  DEFPAR #Kp                 200.
242  DEFPAR #Ki                  50.
243  DEFPAR #Kd                  50.
244  DEFPAR #Td                 0.01
245  DEFPAR #Ka                  1.0
246  DEFPAR #Ta                 0.02
247  DEFPAR #Bex               1.9596
248  DEFPAR #Aex            0.0000319
249  DEFPAR #Ke                  1.0
250  DEFPAR #Te                 0.785
251  (
252  (nb)i(tipo) (stip)s(vent) (vsai) ( p1 )( p2 )( p3 )( p4 ) (vmin) (vmax)
253  0001 ENTRAD                VREF
254  0002 IMPORT   VTR          VT
255  0003 IMPORT   VSAD         VPSS
256  0004 LEDLAG        VT      X1      1      0      1      #Tr
257  0005 SOMA          VREF    X2
258                    -X1      X2
259                     VPSS    X2
260  0006 WSHOUT        EFD     X3      #Kf    1      #Tf
261  0007 SOMA          X2      X4
```

```
                    -X3     X4
0008 GANHO           X4     X6     #Kp
0009 PROINT          X4     X7     #Ki    0     1
0010 WSHOUT          X4     X8     #Kd    1     #Td
0011 SOMA            X6     X5
                     X7     X5
                     X8     X5
0012 LIMITA          X5     X9                          Vrmin  Vrmax
0013 GANHO           X9     X10    #Ka
0014 LEDLAG          X10    X11    1     0     1     #Ta
0015 LIMITA          X11    X12                         Efdmin Efdmax
0016 GANHO           EFD    X14    #Bex
0017 FUNCAO  EXP     X14    X15    1     1
0018 GANHO           X15    X16    #Aex
0019 MULTPL          X16    X13
                     EFD    X13
0020 SOMA            X12    X17
                    -X13    X17
0021 LEDLAG          X17    EFD    1     0     #Ke   #Te
0022 EXPORT  EFD     EFD
(
(DEFVA (stip) (vdef) ( d1 )
DEFVAL        Vrmin  -10.0
DEFVAL        Vrmax   10.0
DEFVAL        Efdmin -10.0
DEFVAL        Efdmax  10.0
FIMCDU
(*********************************************************************
(ncdu) ( nome cdu )
  1006 AVR_G6
(EFPAR (nome) (     valor      )
DEFPAR #Tr                  0.01
DEFPAR #Kf                  0.03
DEFPAR #Tf                   1.0
DEFPAR #Kp                  200.
DEFPAR #Ki                   50.
DEFPAR #Kd                   50.
DEFPAR #Td                  0.01
DEFPAR #Ka                   1.0
DEFPAR #Ta                  0.02
DEFPAR #Bex               1.9596
DEFPAR #Aex            0.0000319
DEFPAR #Ke                   1.0
DEFPAR #Te                 0.785
(
(nb)i(tipo) (stip)s(vent) (vsai) ( p1 )( p2 )( p3 )( p4 ) (vmin) (vmax)
0001 ENTRAD               VREF
0002 IMPORT   VTR         VT
0003 IMPORT   VSAD        VPSS
0004 LEDLAG          VT     X1     1     0     1     #Tr
0005 SOMA            VREF   X2
                    -X1     X2
                     VPSS   X2
0006 WSHOUT          EFD    X3     #Kf   1     #Tf
0007 SOMA            X2     X4
                    -X3     X4
0008 GANHO           X4     X6     #Kp
0009 PROINT          X4     X7     #Ki    0     1
0010 WSHOUT          X4     X8     #Kd    1     #Td
0011 SOMA            X6     X5
                     X7     X5
                     X8     X5
0012 LIMITA          X5     X9                          Vrmin  Vrmax
0013 GANHO           X9     X10    #Ka
0014 LEDLAG          X10    X11    1     0     1     #Ta
0015 LIMITA          X11    X12                         Efdmin Efdmax
```

```
328  0016 GANHO          EFD    X14    #Bex
329  0017 FUNCAO   EXP   X14    X15    1      1
330  0018 GANHO          X15    X16    #Aex
331  0019 MULTPL         X16    X13
332                      EFD    X13
333  0020 SOMA           X12    X17
334                     -X13    X17
335  0021 LEDLAG         X17    EFD    1      0      #Ke    #Te
336  0022 EXPORT   EFD   EFD
337  (
338  (DEFVA (stip) (vdef) ( d1 )
339  DEFVAL        Vrmin  -10.0
340  DEFVAL        Vrmax   10.0
341  DEFVAL        Efdmin -10.0
342  DEFVAL        Efdmax  10.0
343  FIMCDU
344  (*********************************************************************
345  (ncdu) ( nome cdu )
346    1007 AVR_G7
347  (EFPAR (nome) (      valor       )
348  DEFPAR #Tr                   0.01
349  DEFPAR #Kf                   0.03
350  DEFPAR #Tf                    1.0
351  DEFPAR #Kp                   200.
352  DEFPAR #Ki                    50.
353  DEFPAR #Kd                    50.
354  DEFPAR #Td                   0.01
355  DEFPAR #Ka                    1.0
356  DEFPAR #Ta                   0.02
357  DEFPAR #Bex                1.9596
358  DEFPAR #Aex            0.0000319
359  DEFPAR #Ke                    1.0
360  DEFPAR #Te                  0.785
361  (
362  (nb)i(tipo) (stip)s(vent) (vsai) ( p1 )( p2 )( p3 )( p4 ) (vmin) (vmax)
363  0001 ENTRAD                VREF
364  0002 IMPORT   VTR          VT
365  0003 IMPORT   VSAD         VPSS
366  0004 LEDLAG         VT     X1     1      0      1      #Tr
367  0005 SOMA           VREF   X2
368                     -X1     X2
369                      VPSS   X2
370  0006 WSHOUT         EFD    X3     #Kf    1      #Tf
371  0007 SOMA           X2     X4
372                     -X3     X4
373  0008 GANHO          X4     X6     #Kp
374  0009 PROINT         X4     X7     #Ki    0      1
375  0010 WSHOUT         X4     X8     #Kd    1      #Td
376  0011 SOMA           X6     X5
377                      X7     X5
378                      X8     X5
379  0012 LIMITA         X5     X9                           Vrmin  Vrmax
380  0013 GANHO          X9     X10    #Ka
381  0014 LEDLAG         X10    X11    1      0      1      #Ta
382  0015 LIMITA         X11    X12                          Efdmin Efdmax
383  0016 GANHO          EFD    X14    #Bex
384  0017 FUNCAO   EXP   X14    X15    1      1
385  0018 GANHO          X15    X16    #Aex
386  0019 MULTPL         X16    X13
387                      EFD    X13
388  0020 SOMA           X12    X17
389                     -X13    X17
390  0021 LEDLAG         X17    EFD    1      0      #Ke    #Te
391  0022 EXPORT   EFD   EFD
392  (
393  (DEFVA (stip) (vdef) ( d1 )
```

```
394  DEFVAL        Vrmin  -10.0
395  DEFVAL        Vrmax   10.0
396  DEFVAL        Efdmin -10.0
397  DEFVAL        Efdmax  10.0
398  FIMCDU
399  (*********************************************************************
400  (ncdu) ( nome cdu )
401    1008 AVR_G8
402  (EFPAR (nome) (     valor      )
403  DEFPAR #Tr                  0.01
404  DEFPAR #Kf                  0.03
405  DEFPAR #Tf                   1.0
406  DEFPAR #Kp                  200.
407  DEFPAR #Ki                   50.
408  DEFPAR #Kd                   50.
409  DEFPAR #Td                  0.01
410  DEFPAR #Ka                   1.0
411  DEFPAR #Ta                  0.02
412  DEFPAR #Bex               1.9596
413  DEFPAR #Aex            0.0000319
414  DEFPAR #Ke                   1.0
415  DEFPAR #Te                 0.785
416  (
417  (nb)i(tipo) (stip)s(vent) (vsai) ( p1 )( p2 )( p3 )( p4 ) (vmin) (vmax)
418  0001 ENTRAD                VREF
419  0002 IMPORT   VTR          VT
420  0003 IMPORT   VSAD         VPSS
421  0004 LEDLAG        VT      X1      1      0      1      #Tr
422  0005 SOMA          VREF    X2
423                    -X1      X2
424                     VPSS    X2
425  0006 WSHOUT        EFD     X3      #Kf    1      #Tf
426  0007 SOMA          X2      X4
427                    -X3      X4
428  0008 GANHO         X4      X6      #Kp
429  0009 PROINT        X4      X7      #Ki    0      1
430  0010 WSHOUT        X4      X8      #Kd    1      #Td
431  0011 SOMA          X6      X5
432                     X7      X5
433                     X8      X5
434  0012 LIMITA        X5      X9                            Vrmin  Vrmax
435  0013 GANHO         X9      X10     #Ka
436  0014 LEDLAG        X10     X11     1      0      1      #Ta
437  0015 LIMITA        X11     X12                           Efdmin Efdmax
438  0016 GANHO         EFD     X14     #Bex
439  0017 FUNCAO  EXP   X14     X15     1      1
440  0018 GANHO         X15     X16     #Aex
441  0019 MULTPL        X16     X13
442                     EFD     X13
443  0020 SOMA          X12     X17
444                    -X13     X17
445  0021 LEDLAG        X17     EFD     1      0      #Ke    #Te
446  0022 EXPORT  EFD   EFD
447  (
448  (DEFVA (stip) (vdef) ( d1 )
449  DEFVAL        Vrmin  -10.0
450  DEFVAL        Vrmax   10.0
451  DEFVAL        Efdmin -10.0
452  DEFVAL        Efdmax  10.0
453  FIMCDU
454  (*********************************************************************
455  (ncdu) ( nome cdu )
456    1009 AVR_G9
457  (EFPAR (nome) (     valor      )
458  DEFPAR #Tr                  0.01
459  DEFPAR #Ka                  200
460  (nb)i(tipo) (stip)s(vent) (vsai) ( p1 )( p2 )( p3 )( p4 ) (vmin) (vmax)
```

```
461  0001 ENTRAD                VREF
462  0002 IMPORT   VTR          VT
463  0003 IMPORT   VSAD         VPSS
464  0004 LEDLAG        VT      X1      1.0   0.0   1.0   #TR
465  0005 SOMA         -X1      X2
466                     VREF    X2
467                     VPSS    X2
468  0006 GANHO         X2      X3      #KA
469  0007 LIMITA        X3      XX                          VEmin  VEmax
470  0008 EXPORT   EFD   XX
471  (
472  (DEFVA (stip) (vdef) ( d1 )
473  DEFVAL        VEmin  -10.0
474  DEFVAL        VEmax   10.0
475  FIMCDU
476  (*********************************************************************
477  (ncdu) ( nome cdu )
478    1010 AVR_G10
479  (EFPAR (nome) (     valor      )
480  DEFPAR #Tr                  0.01
481  DEFPAR #Kf                  0.03
482  DEFPAR #Tf                   1.0
483  DEFPAR #Kp                  200.
484  DEFPAR #Ki                   50.
485  DEFPAR #Kd                   50.
486  DEFPAR #Td                  0.01
487  DEFPAR #Ka                   1.0
488  DEFPAR #Ta                  0.02
489  DEFPAR #Bex               1.9596
490  DEFPAR #Aex            0.0000319
491  DEFPAR #Ke                   1.0
492  DEFPAR #Te                 0.785
493  (
494  (nb)i(tipo) (stip)s(vent) (vsai) ( p1 )( p2 )( p3 )( p4 ) (vmin) (vmax)
495  0001 ENTRAD                VREF
496  0002 IMPORT   VTR          VT
497  0003 IMPORT   VSAD         VPSS
498  0004 LEDLAG        VT      X1      1     0     1     #Tr
499  0005 SOMA          VREF    X2
500                    -X1      X2
501                     VPSS    X2
502  0006 WSHOUT        EFD     X3      #Kf   1     #Tf
503  0007 SOMA          X2      X4
504                    -X3      X4
505  0008 GANHO         X4      X6      #Kp
506  0009 PROINT        X4      X7      #Ki   0     1
507  0010 WSHOUT        X4      X8      #Kd   1     #Td
508  0011 SOMA          X6      X5
509                     X7      X5
510                     X8      X5
511  0012 LIMITA        X5      X9                          Vrmin  Vrmax
512  0013 GANHO         X9      X10     #Ka
513  0014 LEDLAG        X10     X11     1     0     1     #Ta
514  0015 LIMITA        X11     X12                         Efdmin Efdmax
515  0016 GANHO         EFD     X14     #Bex
516  0017 FUNCAO  EXP   X14     X15     1     1
517  0018 GANHO         X15     X16     #Aex
518  0019 MULTPL        X16     X13
519                     EFD     X13
520  0020 SOMA          X12     X17
521                    -X13     X17
522  0021 LEDLAG        X17     EFD     1     0     #Ke   #Te
523  0022 EXPORT  EFD   EFD
524  (
525  (DEFVA (stip) (vdef) ( d1 )
526  DEFVAL        Vrmin  -10.0
```

```
527  DEFVAL        Vrmax   10.0
528  DEFVAL        Efdmin -10.0
529  DEFVAL        Efdmax  10.0
530  FIMCDU
531  (*********************************************************************
532  (ncdu) ( nome cdu )
533    1011 AVR_G11
534  (EFPAR (nome) (     valor      )
535  DEFPAR #Tr                  0.01
536  DEFPAR #Kf                  0.03
537  DEFPAR #Tf                   1.0
538  DEFPAR #Kp                  200.
539  DEFPAR #Ki                   50.
540  DEFPAR #Kd                   50.
541  DEFPAR #Td                  0.01
542  DEFPAR #Ka                   1.0
543  DEFPAR #Ta                  0.02
544  DEFPAR #Bex               1.9596
545  DEFPAR #Aex            0.0000319
546  DEFPAR #Ke                   1.0
547  DEFPAR #Te                 0.785
548  (
549  (nb)i(tipo) (stip)s(vent) (vsai) ( p1 )( p2 )( p3 )( p4 ) (vmin) (vmax)
550  0001 ENTRAD               VREF
551  0002 IMPORT   VTR         VT
552  0003 IMPORT   VSAD        VPSS
553  0004 LEDLAG        VT     X1     1     0     1     #Tr
554  0005 SOMA          VREF   X2
555                    -X1     X2
556                     VPSS   X2
557  0006 WSHOUT        EFD    X3     #Kf   1     #Tf
558  0007 SOMA          X2     X4
559                    -X3     X4
560  0008 GANHO         X4     X6     #Kp
561  0009 PROINT        X4     X7     #Ki   0     1
562  0010 WSHOUT        X4     X8     #Kd   1     #Td
563  0011 SOMA          X6     X5
564                     X7     X5
565                     X8     X5
566  0012 LIMITA        X5     X9                        Vrmin  Vrmax
567  0013 GANHO         X9     X10    #Ka
568  0014 LEDLAG        X10    X11    1     0     1     #Ta
569  0015 LIMITA        X11    X12                       Efdmin Efdmax
570  0016 GANHO         EFD    X14    #Bex
571  0017 FUNCAO  EXP   X14    X15    1     1
572  0018 GANHO         X15    X16    #Aex
573  0019 MULTPL        X16    X13
574                     EFD    X13
575  0020 SOMA          X12    X17
576                    -X13    X17
577  0021 LEDLAG        X17    EFD    1     0     #Ke   #Te
578  0022 EXPORT  EFD   EFD
579  (
580  (DEFVA (stip) (vdef) ( d1 )
581  DEFVAL        Vrmin  -10.0
582  DEFVAL        Vrmax   10.0
583  DEFVAL        Efdmin -10.0
584  DEFVAL        Efdmax  10.0
585  FIMCDU
586  (*********************************************************************
587  (ncdu) ( nome cdu )
588    1012 AVR_G12
589  (EFPAR (nome) (     valor      )
590  DEFPAR #Tr                  0.01
591  DEFPAR #Kf                  0.03
592  DEFPAR #Tf                   1.0
593  DEFPAR #Kp                  200.
```

```
DEFPAR #Ki                    50.
DEFPAR #Kd                    50.
DEFPAR #Td                   0.01
DEFPAR #Ka                    1.0
DEFPAR #Ta                   0.02
DEFPAR #Bex                1.9596
DEFPAR #Aex            0.0000319
DEFPAR #Ke                    1.0
DEFPAR #Te                  0.785
(
(nb)i(tipo) (stip)s(vent) (vsai) ( p1 )( p2 )( p3 )( p4 ) (vmin) (vmax)
0001 ENTRAD                VREF
0002 IMPORT   VTR          VT
0003 IMPORT   VSAD         VPSS
0004 LEDLAG        VT      X1      1      0      1      #Tr
0005 SOMA          VREF    X2
                  -X1      X2
                   VPSS    X2
0006 WSHOUT        EFD     X3      #Kf    1      #Tf
0007 SOMA          X2      X4
                  -X3      X4
0008 GANHO         X4      X6      #Kp
0009 PROINT        X4      X7      #Ki    0      1
0010 WSHOUT        X4      X8      #Kd    1      #Td
0011 SOMA          X6      X5
                   X7      X5
                   X8      X5
0012 LIMITA        X5      X9                            Vrmin  Vrmax
0013 GANHO         X9      X10     #Ka
0014 LEDLAG        X10     X11     1      0      1      #Ta
0015 LIMITA        X11     X12                           Efdmin Efdmax
0016 GANHO         EFD     X14     #Bex
0017 FUNCAO  EXP   X14     X15     1      1
0019 MULTPL        X16     X13
                   EFD     X13
0020 SOMA          X12     X17
                  -X13     X17
0021 LEDLAG        X17     EFD     1      0      #Ke    #Te
0022 EXPORT  EFD   EFD
(
(DEFVA (stip) (vdef) ( d1 )
DEFVAL        Vrmin  -10.0
DEFVAL        Vrmax   10.0
DEFVAL        Efdmin -10.0
DEFVAL        Efdmax  10.0
FIMCDU
(*********************************************************************
(ncdu) ( nome cdu )
  1101  PSS_G1
(EFPAR (nome) (     valor      )
DEFPAR #K                   20.0
DEFPAR #TW                  15.0
DEFPAR #T1                  0.15
DEFPAR #T2                  0.04
DEFPAR #T3                  0.15
DEFPAR #T4                  0.04
DEFPAR #T5                  0.15
DEFPAR #T6                  0.04
(
(nb)i(tipo) (stip)s(vent) (vsai) ( p1 )( p2 )( p3 )( p4 ) (vmin) (vmax)
0001 IMPORT  DWMAQ          Dw
0020  GANHO           Dw    X1     #K
0030 WSHOUT           X1    X2     #TW    1.0    #TW
0040 LEDLAG           X2    X3     1.0    #T1    1.0    #T2
0050 LEDLAG           X3    X4     1.0    #T3    1.0    #T4
0060 LEDLAG           X4    X5     1.0    #T5    1.0    #T6  Vpmin  Vpmax
0070 EXPORT  VSAD     X5
```

```
662  (
663  (DEFVA (stip) (vdef) ( d1 )
664  DEFVAL        Vpmin   -0.05
665  DEFVAL        Vpmax    0.2
666  FIMCDU
667  (**********************************************************************
668  (ncdu) ( nome cdu )
669    1102  PSS_G2
670  (EFPAR (nome) (     valor      )
671  DEFPAR #K                   20.0
672  DEFPAR #TW                  15.0
673  DEFPAR #T1                  0.15
674  DEFPAR #T2                  0.04
675  DEFPAR #T3                  0.15
676  DEFPAR #T4                  0.04
677  DEFPAR #T5                  0.15
678  DEFPAR #T6                  0.04
679  (
680  (nb)i(tipo) (stip)s(vent) (vsai) ( p1 )( p2 )( p3 )( p4 ) (vmin) (vmax)
681  0001 IMPORT  DWMAQ          Dw
682  0020  GANHO           Dw    X1    #K
683  0030 WSHOUT           X1    X2    #TW   1.0    #TW
684  0040 LEDLAG           X2    X3    1.0   #T1    1.0   #T2
685  0050 LEDLAG           X3    X4    1.0   #T3    1.0   #T4
686  0060 LEDLAG           X4    X5    1.0   #T5    1.0   #T6  Vpmin  Vpmax
687  0070 EXPORT  VSAD     X5
688  (
689  (DEFVA (stip) (vdef) ( d1 )
690  DEFVAL        Vpmin   -0.05
691  DEFVAL        Vpmax    0.2
692  FIMCDU
693  (**********************************************************************
694  (ncdu) ( nome cdu )
695    1103  PSS_G3
696  (EFPAR (nome) (     valor      )
697  DEFPAR #K                   20.0
698  DEFPAR #TW                  15.0
699  DEFPAR #T1                  0.15
700  DEFPAR #T2                  0.04
701  DEFPAR #T3                  0.15
702  DEFPAR #T4                  0.04
703  DEFPAR #T5                  0.15
704  DEFPAR #T6                  0.04
705  (
706  (nb)i(tipo) (stip)s(vent) (vsai) ( p1 )( p2 )( p3 )( p4 ) (vmin) (vmax)
707  0001 IMPORT  DWMAQ          Dw
708  0020  GANHO           Dw    X1    #K
709  0030 WSHOUT           X1    X2    #TW   1.0    #TW
710  0040 LEDLAG           X2    X3    1.0   #T1    1.0   #T2
711  0050 LEDLAG           X3    X4    1.0   #T3    1.0   #T4
712  0060 LEDLAG           X4    X5    1.0   #T5    1.0   #T6  Vpmin  Vpmax
713  0070 EXPORT  VSAD     X5
714  (
715  (DEFVA (stip) (vdef) ( d1 )
716  DEFVAL        Vpmin   -0.05
717  DEFVAL        Vpmax    0.2
718  FIMCDU
719  (**********************************************************************
720  (ncdu) ( nome cdu )
721    1104  PSS_G4
722  (EFPAR (nome) (     valor      )
723  DEFPAR #K                   20.0
724  DEFPAR #TW                  15.0
725  DEFPAR #T1                  0.15
726  DEFPAR #T2                  0.04
727  DEFPAR #T3                  0.15
728  DEFPAR #T4                  0.04
```

```
DEFPAR #T5                    0.15
DEFPAR #T6                    0.04
(
(nb)i(tipo) (stip)s(vent) (vsai) ( p1 )( p2 )( p3 )( p4 ) (vmin) (vmax)
0001 IMPORT  DWMAQ            Dw
0020  GANHO            Dw     X1     #K
0030 WSHOUT            X1     X2     #TW    1.0     #TW
0040 LEDLAG            X2     X3     1.0    #T1     1.0    #T2
0050 LEDLAG            X3     X4     1.0    #T3     1.0    #T4
0060 LEDLAG            X4     X5     1.0    #T5     1.0    #T6  Vpmin  Vpmax
0070 EXPORT  VSAD      X5
(
(DEFVA (stip) (vdef) ( d1 )
DEFVAL         Vpmin   -0.05
DEFVAL         Vpmax    0.2
FIMCDU
(************************************************************************
(ncdu) ( nome cdu )
  1105  PSS_G5
(EFPAR (nome) (     valor      )
DEFPAR #K                     20.0
DEFPAR #TW                    15.0
DEFPAR #T1                    0.15
DEFPAR #T2                    0.04
DEFPAR #T3                    0.15
DEFPAR #T4                    0.04
DEFPAR #T5                    0.15
DEFPAR #T6                    0.04
(
(nb)i(tipo) (stip)s(vent) (vsai) ( p1 )( p2 )( p3 )( p4 ) (vmin) (vmax)
0001 IMPORT  DWMAQ            Dw
0020  GANHO            Dw     X1     #K
0030 WSHOUT            X1     X2     #TW    1.0     #TW
0040 LEDLAG            X2     X3     1.0    #T1     1.0    #T2
0050 LEDLAG            X3     X4     1.0    #T3     1.0    #T4
0060 LEDLAG            X4     X5     1.0    #T5     1.0    #T6  Vpmin  Vpmax
0070 EXPORT  VSAD      X5
(
(DEFVA (stip) (vdef) ( d1 )
DEFVAL         Vpmin   -0.05
DEFVAL         Vpmax    0.2
FIMCDU
(************************************************************************
(ncdu) ( nome cdu )
  1106  PSS_G6
(EFPAR (nome) (     valor      )
DEFPAR #K                     20.0
DEFPAR #TW                    15.0
DEFPAR #T1                    0.15
DEFPAR #T2                    0.04
DEFPAR #T3                    0.15
DEFPAR #T4                    0.04
DEFPAR #T5                    0.15
DEFPAR #T6                    0.04
(
(nb)i(tipo) (stip)s(vent) (vsai) ( p1 )( p2 )( p3 )( p4 ) (vmin) (vmax)
0001 IMPORT  DWMAQ            Dw
0020  GANHO            Dw     X1     #K
0030 WSHOUT            X1     X2     #TW    1.0     #TW
0040 LEDLAG            X2     X3     1.0    #T1     1.0    #T2
0050 LEDLAG            X3     X4     1.0    #T3     1.0    #T4
0060 LEDLAG            X4     X5     1.0    #T5     1.0    #T6  Vpmin  Vpmax
0070 EXPORT  VSAD      X5
(
(DEFVA (stip) (vdef) ( d1 )
DEFVAL         Vpmin   -0.05
```

```
795  DEFVAL        Vpmax    0.2
796  FIMCDU
797  (*********************************************************************
798  (ncdu) ( nome cdu )
799    1107  PSS_G7
800  (EFPAR (nome) (     valor      )
801  DEFPAR #K                    20.0
802  DEFPAR #TW                   15.0
803  DEFPAR #T1                   0.15
804  DEFPAR #T2                   0.04
805  DEFPAR #T3                   0.15
806  DEFPAR #T4                   0.04
807  DEFPAR #T5                   0.15
808  DEFPAR #T6                   0.04
809  (
810  (nb)i(tipo) (stip)s(vent) (vsai) ( p1 )( p2 )( p3 )( p4 ) (vmin) (vmax)
811  0001 IMPORT  DWMAQ           Dw
812  0020  GANHO            Dw    X1    #K
813  0030 WSHOUT            X1    X2    #TW   1.0    #TW
814  0040 LEDLAG            X2    X3    1.0   #T1    1.0   #T2
815  0050 LEDLAG            X3    X4    1.0   #T3    1.0   #T4
816  0060 LEDLAG            X4    X5    1.0   #T5    1.0   #T6  Vpmin  Vpmax
817  0070 EXPORT  VSAD      X5
818  (
819  (DEFVA (stip) (vdef) ( d1 )
820  DEFVAL        Vpmin   -0.05
821  DEFVAL        Vpmax    0.2
822  FIMCDU
823  (*********************************************************************
824  (ncdu) ( nome cdu )
825    1108  PSS_G8
826  (EFPAR (nome) (     valor      )
827  DEFPAR #K                    20.0
828  DEFPAR #TW                   15.0
829  DEFPAR #T1                   0.15
830  DEFPAR #T2                   0.04
831  DEFPAR #T3                   0.15
832  DEFPAR #T4                   0.04
833  DEFPAR #T5                   0.15
834  DEFPAR #T6                   0.04
835  (
836  (nb)i(tipo) (stip)s(vent) (vsai) ( p1 )( p2 )( p3 )( p4 ) (vmin) (vmax)
837  0001 IMPORT  DWMAQ           Dw
838  0020  GANHO            Dw    X1    #K
839  0030 WSHOUT            X1    X2    #TW   1.0    #TW
840  0040 LEDLAG            X2    X3    1.0   #T1    1.0   #T2
841  0050 LEDLAG            X3    X4    1.0   #T3    1.0   #T4
842  0060 LEDLAG            X4    X5    1.0   #T5    1.0   #T6  Vpmin  Vpmax
843  0070 EXPORT  VSAD      X5
844  (
845  (DEFVA (stip) (vdef) ( d1 )
846  DEFVAL        Vpmin   -0.05
847  DEFVAL        Vpmax    0.2
848  FIMCDU
849  (*********************************************************************
850  (ncdu) ( nome cdu )
851    1109  PSS_G9
852  (EFPAR (nome) (     valor      )
853  DEFPAR #K                    12.0
854  DEFPAR #TW                   10.0
855  DEFPAR #T1                   0.09
856  DEFPAR #T2                   0.02
857  DEFPAR #T3                   0.09
858  DEFPAR #T4                   0.02
859  (
860  (nb)i(tipo) (stip)s(vent) (vsai) ( p1 )( p2 )( p3 )( p4 ) (vmin) (vmax)
861  0001 IMPORT  DWMAQ           Dw
862  0020  GANHO            Dw    X1    #K
```

```
0040 LEDLAG          X2    X3    1.0   #T1    1.0   #T2
0050 LEDLAG          X3    X4    1.0   #T3    1.0   #T4  Vpmin  Vpmax
0060 EXPORT  VSAD    X4
(
(DEFVA (stip) (vdef) ( d1 )
DEFVAL       Vpmin   -0.05
DEFVAL       Vpmax    0.2
FIMCDU
(*********************************************************************
(ncdu) ( nome cdu )
  1110  PSS_G10
(EFPAR (nome) (     valor      )
DEFPAR #K                 20.0
DEFPAR #TW                15.0
DEFPAR #T1                0.15
DEFPAR #T2                0.04
DEFPAR #T3                0.15
DEFPAR #T4                0.04
DEFPAR #T5                0.15
DEFPAR #T6                0.04
(
(nb)i(tipo) (stip)s(vent) (vsai) ( p1 )( p2 )( p3 )( p4 ) (vmin) (vmax)
0001 IMPORT  DWMAQ        Dw
0020  GANHO          Dw   X1    #K
0030 WSHOUT          X1   X2    #TW   1.0    #TW
0040 LEDLAG          X2   X3    1.0   #T1    1.0   #T2
0050 LEDLAG          X3   X4    1.0   #T3    1.0   #T4
0060 LEDLAG          X4   X5    1.0   #T5    1.0   #T6  Vpmin  Vpmax
0070 EXPORT  VSAD    X5
(
(DEFVA (stip) (vdef) ( d1 )
DEFVAL       Vpmin   -0.05
DEFVAL       Vpmax    0.2
FIMCDU
(*********************************************************************
(ncdu) ( nome cdu )
  1111  PSS_G11
(EFPAR (nome) (     valor      )
DEFPAR #K                 20.0
DEFPAR #TW                15.0
DEFPAR #T1                0.15
DEFPAR #T2                0.04
DEFPAR #T3                0.15
DEFPAR #T4                0.04
DEFPAR #T5                0.15
DEFPAR #T6                0.04
(
(nb)i(tipo) (stip)s(vent) (vsai) ( p1 )( p2 )( p3 )( p4 ) (vmin) (vmax)
0001 IMPORT  DWMAQ        Dw
0020  GANHO          Dw   X1    #K
0030 WSHOUT          X1   X2    #TW   1.0    #TW
0040 LEDLAG          X2   X3    1.0   #T1    1.0   #T2
0050 LEDLAG          X3   X4    1.0   #T3    1.0   #T4
0060 LEDLAG          X4   X5    1.0   #T5    1.0   #T6  Vpmin  Vpmax
0070 EXPORT  VSAD    X5
(
(DEFVA (stip) (vdef) ( d1 )
DEFVAL       Vpmin   -0.05
DEFVAL       Vpmax    0.2
FIMCDU
(*********************************************************************
(ncdu) ( nome cdu )
  1112  PSS_G12
(EFPAR (nome) (     valor      )
DEFPAR #K                 20.0
DEFPAR #TW                15.0
DEFPAR #T1                0.15
DEFPAR #T2                0.04
```

```
932  DEFPAR #T3                    0.15
933  DEFPAR #T4                    0.04
934  DEFPAR #T5                    0.15
935  DEFPAR #T6                    0.04
936  (
937  (nb)i(tipo) (stip)s(vent) (vsai) ( p1 )( p2 )( p3 )( p4 ) (vmin) (vmax)
938  0001 IMPORT  DWMAQ            Dw
939  0020  GANHO            Dw     X1     #K
940  0030 WSHOUT            X1     X2     #TW    1.0     #TW
941  0040 LEDLAG            X2     X3     1.0    #T1     1.0    #T2
942  0050 LEDLAG            X3     X4     1.0    #T3     1.0    #T4
943  0060 LEDLAG            X4     X5     1.0    #T5     1.0    #T6  Vpmin  Vpmax
944  0070 EXPORT  VSAD      X5
945  (
946  (DEFVA (stip) (vdef) ( d1 )
947  DEFVAL        Vpmin   -0.05
948  DEFVAL        Vpmax    0.2
949  FIMCDU
950  999999
951  FIM
```

Figure C-1: Models of voltage regulators for the generators (*.cdu file).

References

[1] B. Pal and B. Chaudhuri, Robust Control in Power Systems. New York, U.S.A.: Springer, 2005, chapter 4.

[2] CEPEL, Centro de Pesquisas em Energia Elétrica. Rio de Janeiro, RJ, 2002. PACDYN – On-Line Manual (in English). Available in http://www.pacdyn.cepel.br. Accessed in July 11, 2013.

[3] B. C. Pal, and A. K. Singh. IEEE PES Task Force on Benchmark Systems for Stability Controls – Report on the 68-Bus, 16-Machine, 5-Area System. Version 3.3, Dec., 2013.

[4] P. Kundur, Power System Stability and Control. New York: McGraw-Hill, 1994.