IEEE PES Task Force on Benchmark Systems for Stability Controls

Report on the 39-bus system (New England Reduced Model)

Version 1 - April 9th, 2013

Rodrigo A. Ramos, Roman Kuiava, Tatiane C. C. Fernandes, Liciane C. Pataca and Moussa R. Mansour

---

The present report refers to a small-signal stability study carried over the New England reduced order model using the Anarede/PacDyn/Anatem package from CEPEL. This report has the objective to show how the simulation of this system must be done using this package in order to get results that are comparable (and exhibit a good match with respect to the electromechanical modes) with the ones presented in the website *www.sel.eesc.usp.br/ieee*[1]. To facilitate the comprehension, this report is divided in three sections (according to the software to be used):

- Load Flow (ANAREDE);
- Small-Signal Stability Assessment via Eigenvalue Calculation (PacDyn);
- Numerical Simulation of the Nonlinear Model (ANATEM);

1. Load Flow

The load flow of the 39-bus system was calculated using the ANAREDE software. Both the input file (for the correct initialization of the software) and the obtained results are given below in sections 1.1 and 1.2.

1.1 Input File

To use the ANAREDE software, an input file was produced containing the data on the topology of the system. In this input file, presented in Appendix A (and also available for download at the website), loads were modeled as constant power elements and the voltage groups to which each of the buses in the system belong were specified. Furthermore, it is in the

[1] In the following along the text, when the authors refer to "the website", the meaning is the webpage *www.sel.eesc.usp.br/ieee*, which is the provisional website for storage of the data produced by the work of the IEEE PES Task Force on Benchmark Systems for Stability Controls.

input file that the algorithm for load flow calculation is defined. In this case, Newton's method was chosen.

1.2 Results

The results obtained by this load flow calculation can be analyzed from Table **1**. When comparing these results to the ones provided in the website, it is possible to observe a very good match between them. The only difference refers to a standard from ANAREDE, which presents results with a precision up to the first decimal place, while the website gives results with a precision up to the second decimal place. In spite of that, considering typical approximations from the second to the first decimal place, the level of agreement of the results is almost complete.

Table 1: Results of the load flow calculation for the 39-bus system

			Generator		Load	
Bus	**V[pu]**	**Angle[Deg]**	**P[MW]**	**Q[MVAR]**	**P[MW]**	**Q[MVAR]**
1	1.047	-8.4	0.0	0.0	0.0	0.0
2	1.049	-5.8	0.0	0.0	0.0	0.0
3	1.030	-8.6	0.0	0.0	322.0	2.4
4	1.004	-9.6	0.0	0.0	500.0	184.0
5	1.005	-8.6	0.0	0.0	0.0	0.0
6	1.008	-7.9	0.0	0.0	0.0	0.0
7	0.997	-10.1	0.0	0.0	233.8	84.0
8	0.996	-10.6	0.0	0.0	522.0	176.0
9	1.028	-10.3	0.0	0.0	0.0	0.0
10	1.017	-5.4	0.0	0.0	0.0	0.0
11	1.013	-6.3	0.0	0.0	0.0	0.0
12	1.000	-6.2	0.0	0.0	7.5	88.0
13	1.014	-6.1	0.0	0.0	0.0	0.0
14	1.012	-7.7	0.0	0.0	0.0	0.0
15	1.015	-7.7	0.0	0.0	320.0	153.0
16	1.032	-6.2	0.0	0.0	329.4	32.3
17	1.034	-7.3	0.0	0.0	0.0	0.0
18	1.031	-8.2	0.0	0.0	158.0	30.0
19	1.050	-1.0	0.0	0.0	0.0	0.0
20	0.991	-2.0	0.0	0.0	628.0	103.0
21	1.032	-3.8	0.0	0.0	274.0	115.0
22	1.050	0.7	0.0	0.0	0.0	0.0
23	1.045	0.5	0.0	0.0	274.5	84.6
24	1.037	-6.1	0.0	0.0	308.6	-92.2
25	1.058	-4.4	0.0	0.0	224.0	47.2
26	1.052	-5.5	0.0	0.0	139.0	17.0
27	1.038	-7.5	0.0	0.0	281.0	75.5
28	1.051	-2.0	0.0	0.0	206.0	27.6

29	1.050	0.7	0.0	0.0	283.5	26.9
30	1.048	-3.3	250.0	147.6	0.0	0.0
31	0.982	0.0	520.8	198.2	9.2	4.6
32	0.983	2.6	650.0	204.7	0.0	0.0
33	0.997	4.2	632.0	109.6	0.0	0.0
34	1.012	3.2	508.0	165.3	0.0	0.0
35	1.049	5.6	650.0	210.6	0.0	0.0
36	1.064	8.3	560.0	102.9	0.0	0.0
37	1.028	2.4	540.0	0.2	0.0	0.0
38	1.027	7.8	830.0	23.2	0.0	0.0
39	1.030	-10.1	1000.0	87.8	1104.0	250.0

From the result of the load flow (which gives information for the calculation of the equilibrium point of the system), it is possible to apply a set of techniques involving linearization to analyze the local, small-signal stability of the system through the calculation of the eigenvalues of the state matrix of the linearized system model. This procedure is carried out by the PacDyn software and is presented in the next section.

2. Small-Signal Stability Analysis of the System

To use the PacDyn software for assessment of the small-signal stability of the Anderson-Farmer system, two input files are necessary. One of them contains the topological data of the system and the results of the load flow calculation, while the other contains the types of models, the structures and the parameters of the generators and its associated controllers. The former is obtained as an output file from the ANAREDE software in the "*.his" or "*.sav" formats. The latter, containing the dynamic data for the system, must be constructed and saved in the "*.dyn" format. This format is described in more detail in section 2.1, while section 2.2 presents the results of the whole study.

2.1 The input file with the dynamic data for the system

In the input file containing the dynamic data for the system (the "*.dyn" file) the models to represent the generators in the system must be chosen, and the controllers for each respective machine must be either chosen as built-in models or defined by the user with a particular syntax. For this study, the details on the model of the generators and its respective controllers are presented in the sequence:

a) Generators

The 39-bus system is composed by 10 generators, and all of them are represented by a 4th order model in this report. The equations of this model can be seen in the sequence.

- **4th order model**

$$\dot{\delta} = \omega \tag{1}$$

$$\dot{\omega} = \frac{1}{\mathrm{M}}(T_{mech} - (I_i I_q + \varphi_q I_d) - D\omega) \tag{2}$$

$$\dot{E'_q} = \frac{1}{T'_{do}}(-E'_q - (x_d - x'_d)I_d + E_{fd}) \tag{3}$$

$$\dot{E'_d} = \frac{1}{T'_{qo}}(-E'_d - (x_q - x'_q)I_q) \tag{4}$$

The PacDyn software provides 8 different built-in models to describe a synchronous machine. Among them, model #3 is the closest to the 4th order model given in the website. Equations (5)-(10), which compose model #3, are presented in the sequence, and it is clear that they are very close to the ones given by (1)-(4).

$$2H\,\dot{\omega} = T_m - T_e - D\omega_r \tag{5}$$

$$\dot{\delta} = \omega_r - \omega_s \tag{6}$$

$$\dot{E'_d} = \frac{1}{T'_{qo}}\left[(x_q - x'_q)I_q + E'_d SAT_q\right] \tag{7}$$

$$\dot{E'_q} = \frac{1}{T'_{do}}\left[E_{fd} - (x_d - x'_d)I_d - E'_q SAT_d\right] \tag{8}$$

$$V_d = \left[E'_d + \left(\frac{x'_q - x_p}{SAT_q} + x_p\right)I_q - R_a I_d\right] \tag{9}$$

$$V_q = \left[E'_q + \left(\frac{x'_d - x_p}{SAT_d} + x_p\right)I_d - R_a I_q\right] \tag{10}$$

b) Controllers

All generators in this system are equipped with automatic voltage regulators (AVRs) and power system stabilizers (PSSs). These generators use the same controller model, only altering the corresponding parameter values according to the specifications given in the website. For the records, the block diagram of each controller model is presented as follows in Figures 1 and 2.

- **Voltage regulator**

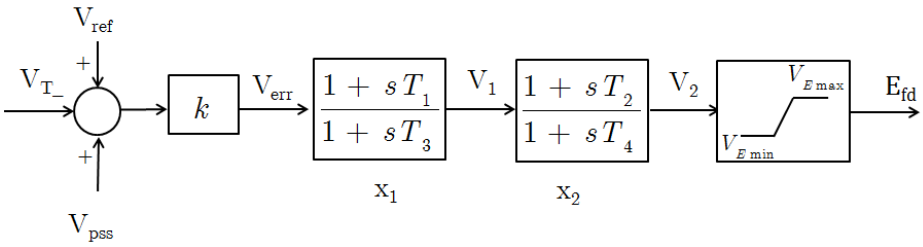

Figure 1: Model of the voltage regulator for all generators

- **PSS**

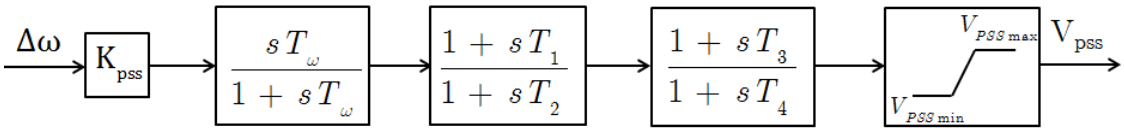

Figure 2: Model of the PSS for all generators

2.2 Results

The results obtained by PacDyn on the small-signal stability analysis of the 39-bus system can be seen in Tables 2, 3 and 4. In these tables, it is possible to compare the electromechanical modes obtained via PacDyn with the ones presented in the website. The tables also show the absolute deviation between the two data sets.

Table 2: Comparison of the electromechanical modes #1, #2 and #3 of the system obtained via PacDyn and given at the website

	Mode #1		**Mode #2**		**Mode #3**	
Source	**Real**	**Imag**	**Real**	**Imag**	**Real**	**Imag**
Website	-2.553	10.566	-1.849	10.028	-1.582	8.550
Pacdyn	-2.553	10.569	-1.850	10.197	-1.582	8.550
Absolute Deviation	0.000	0.003	0.000	0.169	0.000	0.000

Table 3: Comparison of the electromechanical modes #3, #4 and #5 of the system obtained via PacDyn and given at the website

	Mode #4		**Mode #5**		**Mode #6**	
Source	**Real**	**Imag**	**Real**	**Imag**	**Real**	**Imag**
Website	-2.563	8.671	-1.863	7.439	-1,312	7,108
Pacdyn	-2.561	8.670	-1.864	7.447	-1,312	7,108
Absolute Deviation	0.002	0.001	0.001	0.008	0.000	0.000

Table 4: Comparison of the electromechanical modes #7, #8 and #9 of the system obtained via PacDyn and given at the website

	Mode #7		Mode #8		Mode #9	
Source	**Real**	**Imag**	**Real**	**Imag**	**Real**	**Imag**
Website	-1,844	7,081	-1,523	6,318	-0.498	3,682
Pacdyn	-1,864	7,082	-1,522	6,316	-0,498	3,682
Absolute Deviation	0.020	0.001	-0.001	-0.002	0.000	0.000

Note that the results presented using two different methods for calculation are quite close, which is a very strong evidence that the key factor in this benchmarking process is the matching of the models used for system analysis. To facilitate this comparison, in Figure 3 the plot of the modes presented in Tables 2, 3 and 4 is given.

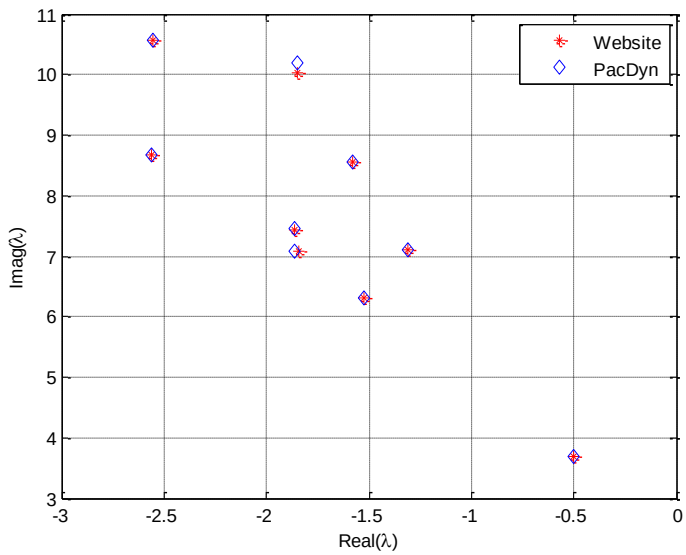

Figure 3: Comparison of the electromechanical modes of the 39-bus system obtained by PacDyn and given in the website.

All the other eigenvalues of the state matrix of the system linearized model are presented in Table 5, where it is possible to compare the eigenvalues calculated by PacDyn with the ones given in the website. The values highlighted in red are the ones that were found in only one of the sources.

Table 5: Comparison of the eigenvalues of the system obtained via PacDyn and given at the website.

Site				**Autovalores PacDyn**			
Real	**Imag**	**f(Hz)**	**ζ(%)**	**Real**	**Imag**	**f(Hz)**	**ζ(%)**
-0.4505	0.6750	0.107	-55.514	-0.4504	0.6750	0.1074	55.504

Site				Autovalores PacDyn			
Real	Imag	f(Hz)	ζ(%)	Real	Imag	f(Hz)	ζ(%)
-0.4861	0.6278	0.100	-61.222	-0.4860	0.6279	0.0999	61.206
-0.4812	0.6084	0.097	-62.035	-0.4810	0.6085	0.9685	62.009
-0.6901	0.8108	0.129	64.813	-0.6901	0.8108	0.1290	64.815
-0.5780	0.6705	0.107	-65.293	-0.5877	0.6705	0.1067	65.918
-0.7928	0.8127	0.129	-69.831	-0.7934	0.8126	0.1293	69.863
-4.4830	4.1880	0.666	73.074	-4.4828	4.1863	0.6663	73.086
-0.8648	0.7743	0.123	74.505	-0.8647	0.7743	0.1232	74.498
-2.9562	2.5076	0.399	76.260	-2.9575	2.5070	3.8771	76.281
-2.0436	1.6338	0.260	78.107	-2.0440	1.6330	0.2599	78.126
-1.2040	0.9107	0.145	79.755	-1.2043	0.9106	0.1449	79.767
-4.3350	2.9883	0.475	82.333	-4.3349	2.9876	0.4755	82.339
-5.7301	3.6713	0.584	84.200	-5.7306	3.6730	0.5846	84.191
-12.618	6.6283	1.055	88.528	-12.616	6.6329	1.0557	88.513
1.4761	0.5231	0.083	94.256	-1.4753	0.5228	0.0832	94.257
-4.3697	1.5310	0.244	94,375	-4.3692	1.5311	0.2437	94.373
-1.0444	0.2387	0.038	97.486	-1.0445	0.2387	0.0380	97.486
-19.993	1.2699	0.202	99.799	-19.992	1.2724	0.2025	99.798
-104.59	0.0	0.0	100.0	---	---	---	---
-103.78	0.0	0.0	100.0	-103.78	0.0	0.0	100.0
-102.68	0.0	0.0	100.0	-102.68	0.0	0.0	100.0
-102.27	0.0	0.0	100.0	-102.27	0.0	0.0	100.0
-102.13	0.0	0.0	100.0	---	---	---	---
-101.90	0.0	0.0	100.0	-101.90	0.0	0.0	100.0
-101.33	0.0	0.0	100.0	-101.33	0.0	0.0	100.0
-101.32	0.0	0.0	100.0	-101.32	0.0	0.0	100.0
-101.31	0.0	0.0	100.0	-101.31	0.0	0.0	100.0
-100.90	0.0	0.0	100.0	-100.90	0.0	0.0	100.0
-72.869	0.0	0.0	100.0	-72.858	0.0	0.0	100.0
-65.987	0.0	0.0	100.0	-65.989	0.0	0.0	100.0
-65.936	0.0	0.0	100.0	---	---	---	---
-65.797	0.0	0.0	100.0	-65.798	0.0	0.0	100.0
-65.165	0.0	0.0	100.0	-65.166	0.0	0.0	100.0
-64.250	0.0	0.0	100.0	-64.249	0.0	0.0	100.0
-63.948	0.0	0.0	100.0	-63.949	0.0	0.0	100.0
-63.535	0.0	0.0	100.0	-63.535	0.0	0.0	100.0
-61.774	0.0	0.0	100.0	-61.774	0.0	0.0	100.0
-59.612	0.0	0.0	100.0	-59.612	0.0	0.0	100.0
-32.118	0.0	0.0	100.0	-32.136	0.0	0.0	100.0
-13.988	0.0	0.0	100.0	-13.981	0.0	0.0	100.0
-7.3691	0.0	0.0	100.0	-7.3691	0.0	0.0	100.0
-7.1480	0.0	0.0	100.0	-7.1480	0.0	0.0	100.0
-5.8943	0.0	0.0	100.0	-5.8945	0.0	0.0	100.0
-5.5374	0.0	0.0	100.0	-5.5392	0.0	0.0	100.0
-2.8327	0.0	0.0	100.0	-2.8327	0.0	0.0	100.0
-2.0263	0.0	0.0	100.0	-2.0263	0.0	0.0	100.0
-1.5315	0.0	0.0	100.0	-1.5315	0.0	0.0	100.0
-1.4500	0.0	0.0	100.0	-1.4501	0.0	0.0	100.0
-1.0995	0.0	0.0	100.0	-1.0996	0.0	0.0	100.0
-0.9758	0.0	0.0	100.0	-0.9758	0.0	0.0	100.0
-0.9592	0.0	0.0	100.0	-0.9592	0.0	0.0	100.0
-0.9066	0.0	0.0	100.0	-0.9065	0.0	0.0	100.0
-0.1920	0.0	0.0	100.0	-0.1616	0.0	0.0	100.0
-0.1007	0.0	0.0	100.0	-0.1007	0.0	0.0	100.0
-0.1003	0.0	0.0	100.0	-0.1003	0.0	0.0	100.0
-0.1002	0.0	0.0	100.0	-0.1002	0.0	0.0	100.0

Site				Autovalores PacDyn			
Real	**Imag**	**f(Hz)**	**ζ(%)**	**Real**	**Imag**	**f(Hz)**	**ζ(%)**
-0.1001	0.0	0.0	100.0	-0.1001	0.0	0.0	100.0
-0.1000	0.0	0.0	100.0	-0.1000	0.0	0.0	100.0
-0.1000	0.0	0.0	100.0	-0.1000	0.0	0.0	100.0
-0.1000	0.0	0.0	100.0	-0.1000	0.0	0.0	100.0
-0.1000	0.0	0.0	100.0	-0.1000	0.0	0.0	100.0

3. Numerical Integration of the Nonlinear Model

To validate the results of the linearized analyzes presented in the previous section, a few simulations of the dynamic response of the systems to certain perturbations were simulated via numerical integration of the nonlinear equations composing the system model, using the ANATEM software. In this section, the machine and controller models used in these simulations, as well as a set of results from one of the mentioned simulations, are presented.

To use the ANATEM software, a main input file must be built containing information such as the operating point of the system and the data corresponding to the gerenators and its respective controllers. Analogously to the PacDyn software, the equilibrium point is provided by the "*.sav" file generated by the ANAREDE software. The generator and controller models used for simulation of the 39-bus system are presented in the sequence. Details of the organization of the files for the execution of the ANATEM software can be seen in Appendix C, and the complete files can be retrieved from the current version of the website.

3.1 Generator Models

As previously mentioned in Section 2.1, the system under study is composed by 10 generators, which are represented by a 4th order model, according to the website. However, ANATEM provides only 3 pre-defined models to represent the synchronous generator:

- Classical machine model (2nd order)
- Model of synchronous machine with salient poles (6th order)
- Model of synchronous machine with round rotor (6 th order)

Therefore, due to the restrictions in the pre-defined models of the software, the model of synchronous machine with salient poles was chosen to represent the generators of the 39-bus system, given that this is the closest model for which a complete set of data is available at the website. In this model, there is one field winding and one damper winding in the direct axis and another damper winding in the quadrature axis. The block diagrams of the models in both axes are presented in Figures 4, 5 and 6, respectively.

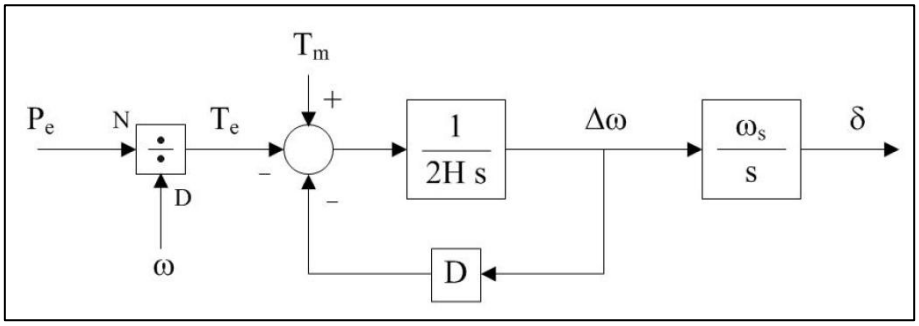

Figure 4 - Block diagram of the model for the swing equation in the ANATEM sofware.

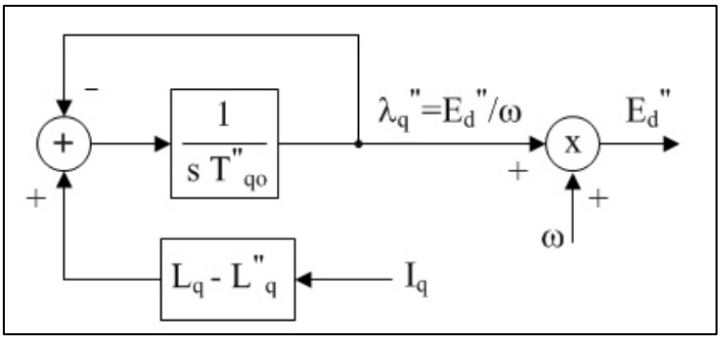

Figure 5- Block diagram for the equations of the quadrature axis

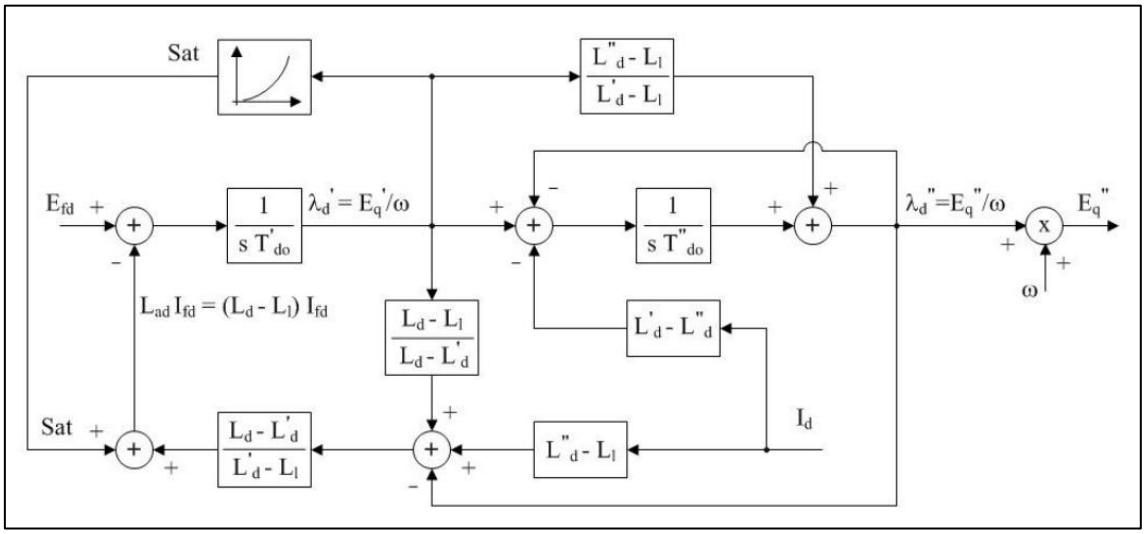

Figure 6- Block diagram for the equations of the direct axis

To carry out the simulation, the estimation of the parameters x''_d, T''_{do}, T''_{qo} was necessary to use the 6th order model. The chosen values are based on the reduced model of the New England/New York interconnected system, a 68-bus system for which the complete data set can be obtained in [1]. The generator data which are also available at the website are presented in Table 6 and Table 7 contains the parameters that were estimated.

Table 6: Generator parameters (also available at the website)

Unit	H	R_a	x'_d	x'_q	x_d	x_q	T'_{do}	T'_{qo}	x_l
1	500.0	0	0.006	0.008	0.02	0.019	7.0	0.7	0.003
2	30.3	0	0.0697	0.170	0.295	0.282	6.56	1.5	0.035
3	35.8	0	0.0531	0.0876	0.2495	0.237	5.7	1.5	0.0340
4	28.6	0	0.0436	0.166	0.262	0.258	5.69	1.5	0.0295
5	26.0	0	0.132	0.166	0.67	0.62	5.4	0.44	0.054
6	34.8	0	0.05	0.0814	0.254	0.241	7.3	0.4	0.0224
7	26.4	0	0.049	0.186	0.295	0.292	5.66	1.5	0.0322
8	24.3	0	0.057	0.0911	0.290	0.280	6.7	0.41	0.028
9	34.5	0	0.057	0.0587	0.2106	0.205	4.79	1.96	0.0298
10	42.0	0	0.031	0.008	0.1	0.069	10.2	0.10	0.0125

Table 7: Generator parameters estimated to allow the ANATEM simulation

Unit	x''_d (pu)	T''_{do}(s)	T''_{qo}(s)
1	0.004	0.05	0.035
2	0.050	0.05	0.035
3	0.045	0.05	0.035
4	0.035	0.05	0.035
5	0.089	0.05	0.035
6	0.040	0.05	0.035
7	0.044	0.05	0.035
8	0.045	0.05	0.035
9	0.045	0.05	0.035
10	0.025	0.05	0.035

Details about the insertion of the synchronous machine model into the corresponding ANATEM input file are given in the "*.blt" file shown in Appendix C.

3.2 Controller models

The controller models were defined by the users via the execution code DCDU and are given in the file 10GENERATOR.cdu, also presented in Appendix C. These models and their parameters were also retrieved from the website, and were already presented in Figures 1, 2, and 3 of this report.

3.3 Results

a) Perturbation data

The applied perturbation was a three-phase-to-ground fault at bus 16, on t = 0.5 s, with a fault impedance of 0.001 p.u. and a duration of 0.2 s.

b) Simulation

The total simulation time was 20 s and the integration step was 0.01 s. The angle of generator 1 (placed at bus 39) was taken as a reference for angle differences, to enable a comparison with the results presented in the website. The main input file 39bus_ANATEM.stb used in the simulation is presented in Appendix C and can also be downloaded from the website.

The angle difference graphs for all generators with respect to the reference are presented in Figures 7 and 8, in the following.

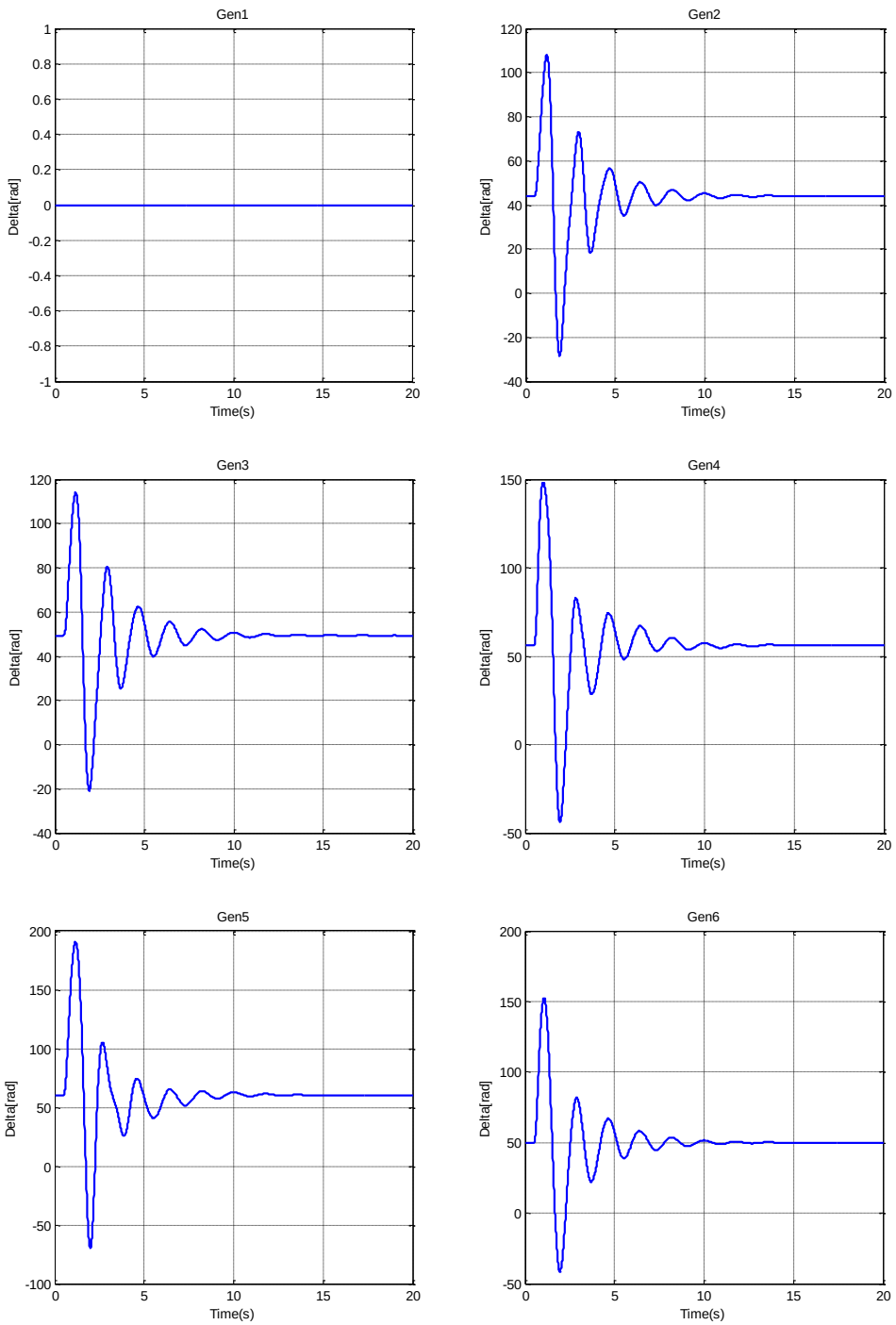

Figure 7- Rotor angles of generators 1, 2, 3, 4, 5, and 6, respectively, referenced to generator 1.

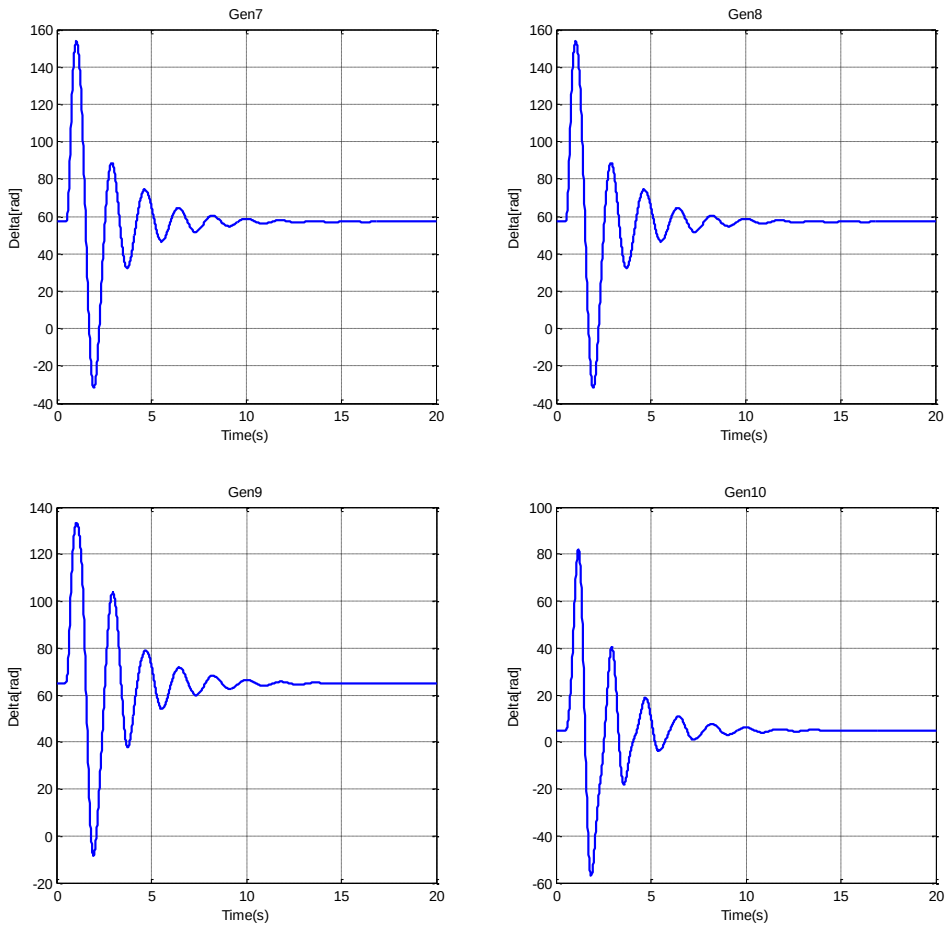

Figure 8- Rotor angles of generators 7, 8, 9, and 10, respectively, referenced to generator 1.

The rotor frequency graphs for all generators are presented in Figures 9, 10, and 11.

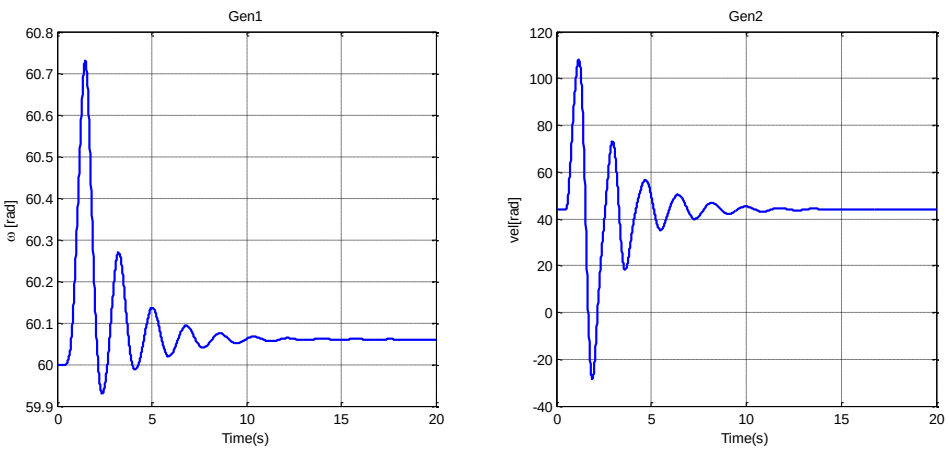

Figure 9- Rotor frequency of generators 1 and 2.

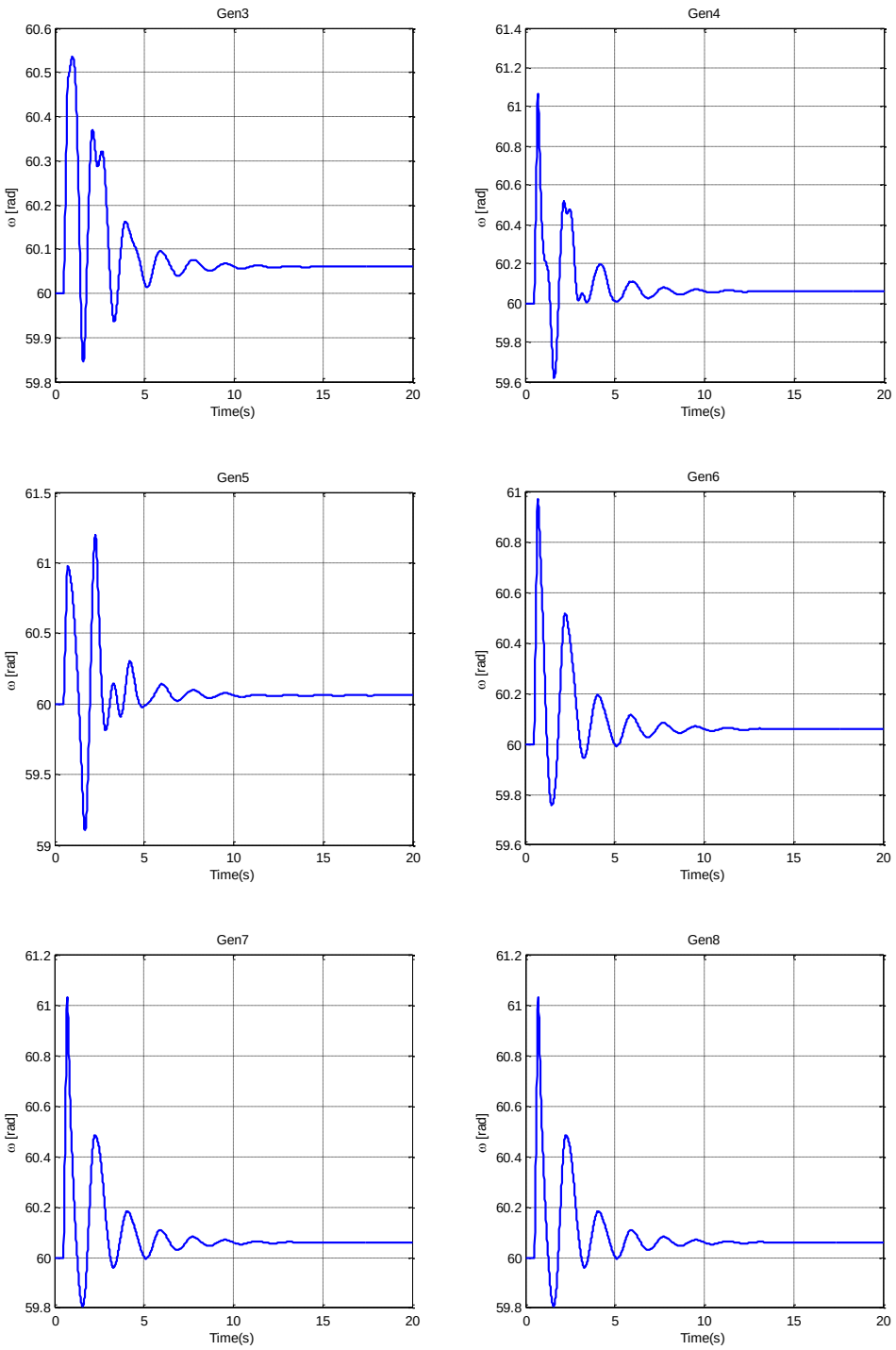

Figure 10- Rotor frequency of generators 3, 4, 5, 6, 7, and 8.

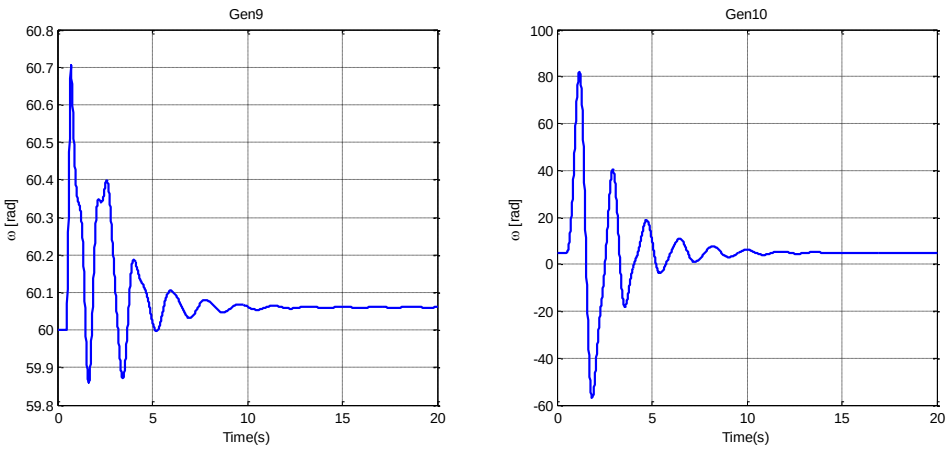

Figure 9- Rotor frequency of generators 9 and 10.

Analyzing these plots, it is difficult to make a comparison between the results obtained by ANATEM and the ones given in the website. Visually, it is only possible to detect small discrepancies between the corresponding plots. These discrepancies were expected due to the difference between the models used for simulation, but they are not significant to the point of invalidating the match between the linear analyses presented in the previous section.

4. Conclusions

As a conclusion of this first study on the small-signal stability of the Anderson-Farmer model, we can see that the results obtained with the ANAREDE/PacDyn/ANATEM package exhibit a satisfactory similarity to the ones provided in the website *www.sel.eesc.usp.br/ieee*. This similarity is observed in the electromechanical modes, which are the main focus of this Task Force, but also extends to the other eigenvalues, which is quite encouraging from the benchmarking viewpoint.

Reinforcing the conclusions presented in the report of the study that was carried out over the 9-bus system (the Anderson-Farmer model), we leave as a suggestion for future work the possibility of applying modal estimation techniques to the results of the nonlinear simulations in an attempt to provide further validation to the identification of the electromechanical modes.

Appendix A

In this appendix, the input file necessary for the correct initialization of the ANAREDE software is presented. Figure A-1 shows how the bus data must be inserted while Figure A-2 performs a similar task with respect to the line data.

```
001 TITU
002 Sistema Teste - New England - 39 barras
003 DBAR
004 (==========================================================================================
005 (   0    |    1    |    2    |    3    |    4    |    5    |    6    |    7    |    8    |
006 (234567890123456789012345678901234567890123456789012345678901234567890123456789012345678901
007 (Num)OETGb(    nome    )Gl( V)( A)( Pg)( Qg)( Qn)( Qm)(Bc   )( Pl)( Ql)( Sh)Are(Vf)
008     1 L   BARRA-001     1000  0                              0.0  0.0        11000
009     2 L   BARRA-002     1000  0                              0.0  0.0        11000
010     3 L   BARRA-003     1000  0                              322. 2.4        11000
011     4 L   BARRA-004     1000  0                              500. 184.       11000
012     5 L   BARRA-005     1000  0                              0.0  0.0        11000
013     6 L   BARRA-006     1000  0                              0.0  0.0        11000
014     7 L   BARRA-007     1000  0                             233.8  84.       11000
015     8 L   BARRA-008     1000  0                              522. 176.       11000
016     9 L   BARRA-009     1000  0                              0.0  0.0        11000
017    10 L   BARRA-010     1000  0                              0.0  0.0        11000
018    11 L   BARRA-011     1000  0                              0.0  0.0        11000
019    12 L   BARRA-012     1000  0                              7.5  88.       11000
020    13 L   BARRA-013     1000  0                              0.0  0.0        11000
021    14 L   BARRA-014     1000  0                              0.0  0.0        11000
022    15 L   BARRA-015     1000  0                              320. 153.       11000
023    16 L   BARRA-016     1000  0                             329.0 32.3       11000
024    17 L   BARRA-017     1000  0                              0.0  0.0        11000
025    18 L   BARRA-018     1000  0                              158.  30.       11000
026    19 L   BARRA-019     1000  0                              0.0  0.0        11000
027    20 L   BARRA-020     1000  0                              628. 103.       11000
028    21 L   BARRA-021     1000  0                              274. 115.       11000
029    22 L   BARRA-022     1000  0                              0.0  0.0        11000
030    23 L   BARRA-023     1000  0                             247.5 84.6       11000
031    24 L   BARRA-024     1000  0                             308.6-92.0       11000
032    25 L   BARRA-025     1000  0                              224. 47.2       11000
033    26 L   BARRA-026     1000  0                              139.  17.       11000
034    27 L   BARRA-027     1000  0                              281. 75.5       11000
035    28 L   BARRA-028     1000  0                              206. 27.6       11000
036    29 L   BARRA-029     1000  0                             283.5 26.9       11000
037    30 L1  BARRA-030     1048    250.      -999999999                       11000
038    31 L2  BARRA-031      982             -999999999        9.2  4.6        11000
039    32 L1  BARRA-032      983    650      -999999999                       11000
040    33 L1  BARRA-033      997    632      -999999999                       11000
041    34 L1  BARRA-034     1012    508      -999999999                       11000
042    35 L1  BARRA-035     1049    650      -999999999                       11000
043    36 L1  BARRA-036     1064    560      -999999999                       11000
044    37 L1  BARRA-037     1028    540      -999999999                       11000
045    38 L1  BARRA-038     1027    830      -999999999                       11000
046    39 L1  BARRA-039     1030    1000     -999999999      1104. 250.       11000
047 99999
```

Figure A-1: Input file for entering the bus data.

```
048 DLIN
049 (De )d O d(Pa )NcEP ( R% )( X% )(Mvar)(Tap)(Tmn)(Tmx)(Phs)(Bc  )(Cn)(Ce)Ns(Cq)(1)(2)(3)(4)(5)(
050     1         2 1      .35  4.11 69.87
051     1        39 1       .1   2.5   75.
052     2         3 1      .13  1.51 25.72
053     2        25 1       .7   .86  14.6
054     3         4 1      .13  2.13 22.14
055     3        18 1      .11  1.33 21.38
056     4         5 1      .08  1.28 13.42
057     4        14 1      .08  1.29 13.82
058     5         6 1      .02   .26  4.34
059     5         8 1      .08  1.12 14.76
060     6         7 1      .06   .92  11.3
061     6        11 1      .07   .82 13.89
062     7         8 1      .04   .46   7.8
063     8         9 1      .23  3.63 38.04
064     9        39 1       .1   2.5  120.
065    10        11 1      .04   .43  7.29
066    10        13 1      .04   .43  7.29
067    13        14 1      .09  1.01 17.23
068    14        15 1      .18  2.17  36.6
069    15        16 1      .09   .94  17.1
070    16        17 1      .07   .89 13.42
071    16        19 1      .16  1.95  30.4
072    16        21 1      .08  1.35 25.48
073    16        24 1      .03   .59   6.8
074    17        18 1      .07   .82 13.19
075    17        27 1      .13  1.73 32.16
076    21        22 1      .08   1.4 25.65
077    22        23 1      .06   .96 18.46
078    23        24 1      .22   3.5  36.1
079    25        26 1      .32  3.23  51.3
080    26        27 1      .14  1.47 23.96
081    26        28 1      .43  4.74 78.02
082    26        29 1      .57  6.25 102.9
083    28        29 1      .14  1.51  24.9
084    12        11 1      .16  4.35      1.006
085    12        13 1      .16  4.35      1.006
086    6         31 1           2.50      1.070
087    10        32 1           2.00      1.070
088    19        33 1      .07  1.42      1.070
089    20        34 1      .09  1.80      1.009
090    22        35 1           1.43      1.025
091    23        36 1      .05  2.72      1.000
092    25        37 1      .06  2.32      1.025
093    2         30 1           1.81      1.025
094    29        38 1      .08  1.56      1.025
095    19        20 1      .07  1.38      1.060
096 99999
097 exlf newt
098 ULOG
099 2
100 sist_new_england_versaofinal.HIS
101 ARQV INIC IMPR
102 SIM
103 ARQV GRAV IMPR SUBS
104 01
```

Figure A-2: Input file for entering the line data

Appendix B

In this appendix, the input file "*.dyn" with the dynamic data used for the eigenvalue calculation in the PacDyn software is presented. To run the PacDyn software, this file must be loaded together with the "*.his" output file provided by the ANAREDE software. In Figures B-1, B-2 and B-3 it is possible to see the entire "*.dyn" input file that was produced for the small-signal stability analysis of the 39-bus system. Note that, in Figure B-1, the block diagrams of the AVR and PSS are built, while in Figures B-2, B-3 and B-4 the controllers with their respective parameters are related to their corresponding generators.

```
001 TITU
002     /// Sistema New England - 39 Barras                    ///
003 DSYS
004 # N = Network File: A = ANAREDE Formatted File
005 #                   H = ANAREDE History   File
006 #                   P = PACDYN  Formatted File (DEFAULT)
007 # P = Network printout | T = Initial conditions test | V = Voltstab analysis
008 #(freq) (base) (no) N P T V
009  60.000 100.00 0001 H N Y N
010 DGEN
011 #(Nb1)noRM(Base)(-HH-)(X'd-)(X'q-)(-Xd-)(-Xq-)(-Ra-)(T'd0)(T'q0)(Xp-)(-Sat-)(-DD-)(Frq)
012     30 0 3 100.0 42.00 .0310 0.008 0.1  0.069  0.00010.200 0.1000.000  0.000 0.00
013     31 0 3 100.0 30.300.0697 0.170 0.295 0.282 0.000 6.560 1.5000.000  0.000 0.00
014     32 0 3 100.0 35.800.05310.0876 .2495 .2370 0.000 5.700 1.5000.000  0.000 0.00
015     33 0 3 100.0 28.600.0436 0.166 0.262 0.258 0.000 5.690 1.5000.000  0.000 0.00
016     34 0 3 100.0 26.00 0.132 0.166 0.67  0.620 0.000 5.400 0.4400.000  0.000 0.00
017     35 0 3 100.0 34.80 0.050 .0814 0.254 0.241 0.000 7.300 0.4000.000  0.000 0.00
018     36 0 3 100.0 26.40 0.049 0.186 0.295 0.292 0.000 5.660 1.5000.000  0.000 0.00
019     37 0 3 100.0 24.30 0.057 .0911 0.290 0.280 0.000 6.700 0.4100.000  0.000 0.00
020     38 0 3 100.0 34.50 0.057 .0587 .2106 .2050 0.000 4.790 1.9600.000  0.000 0.00
021     39 0 3 100.0 500   0.006 0.008 0.020 0.019 0.000 7.000 0.7000.000  0.000 0.00
022  -999
023 DUDT
024 (NUDC) (---Name---)
025  00001  AVR
026 #Flag   (Nb) (Type) S(Vinp) (Vout) (---A----) (---B----) (---C----) (---D----) (---E----)
027            1 IN      VB      VT        #Bus
028            2 IN      VREF    VREF      #Bus
029            3 OUT     EFD     EFD       #Bus
030            4 IN      VPSS    VPSS      #Bus
031 #Flag   (Nb) (Type) S(Vinp) (Vout) (---A----) (---B----) (---C----) (---D----) (---E----)
032            5 LDLG    VT      Vf          1         0         1         #Tr
033            6 SUM    +VREF    Verr        1
034                     -Vf                 1
035                     +VPSS               1
036            7 LDLG    Verr    Xtgr        1        #Tc        1         #Tb
037            8 LDLG    Xtgr    liEfd      #Ka        0         1         #Ta
038            9  LIM    liEfd     EFD     #Emin      #Emax
049 (NUDC) (---Name---)
050  0002   PSS
051 (       (Nb) (Type) S(Vinp) (Vout) (---A----) (---B----) (---C----) (---D----) (---E----)
052            1 OUT     VPSS    VPSS        #Bus
053            2 IN      WW      WW          #Bus
054            3 GAIN    WW      VIN       #Kpss
055            4 LDLG    VIN     VW            0        #TW        1.0        #TW
056            5 LDLG    VW      VP          1.0        #T1        1.0        #T2
057            6 LDLG    VP      VOUT        1.0        #T3        1.0        #T4
058            7 LIM     VOUT    VPSS     #VPSSMIN   #VPSSMAX
059 (            DPAR                   (--Par---) (-Value--)
060              DPAR                      #Kpss
061              DPAR                      #TW
062              DPAR                      #T1
063              DPAR                      #T2
064              DPAR                      #T3
065              DPAR                      #T4
066              DPAR                    #VPSSMIN
067              DPAR                    #VPSSMAX
068              DPAR                      #Bus
069  STOP
070  -999
```

Figure B-1: Insertion of system data, definition of generator models, and building of AVR and PSS models.

```
071 AUDC
072 #(No   ) (---NOME---) (No   ) (---NOME---)
073  0003   AVR_Ger1_39  00001      AVR
074 #                                   (--NAME--) (-VALUE--)
075                                        #Bus       39
076                                        #Tr        0.01
077                                        #Tc        1.0
078                                        #Tb        10.0
079                                        #Ka        200
080                                        #Ta        0.015
081                                        #Emin      -5.0
082                                        #Emax       5.0
083  STOP
084 #(No   ) (---NOME---) (No   ) (---NOME---)
085  0004   AVR_Ger2_31  00001      AVR
086 #                                   (--NAME--) (-VALUE--)
087                                        #Bus       31
088                                        #Tr        0.01
089                                        #Tc        1.0
090                                        #Tb        10.0
091                                        #Ka        200
092                                        #Ta        0.015
093                                        #Emin      -5.0
094                                        #Emax       5.0
095  STOP
096 #(No   ) (---NOME---) (No   ) (---NOME---)
097  0005   AVR_Ger3_32  00001      AVR
098 #                                   (--NAME--) (-VALUE--)
099                                        #Bus       32
100                                        #Tr        0.01
101                                        #Tc        1.0
102                                        #Tb        10.0
103                                        #Ka        200
104                                        #Ta        0.015
105                                        #Emin      -5.0
106                                        #Emax       5.0
107  STOP
108 #(No   ) (---NOME---) (No   ) (---NOME---)
109  0006   AVR_Ger4_33  00001      AVR
110 #                                   (--NAME--) (-VALUE--)
111                                        #Bus       33
112                                        #Tr        0.01
113                                        #Tc        1.0
114                                        #Tb        10.0
115                                        #Ka        200
116                                        #Ta        0.015
117                                        #Emin      -5.0
118                                        #Emax       5.0
119  STOP
120 #(No   ) (---NOME---) (No   ) (---NOME---)
121  0007   AVR_Ger5_34  00001      AVR
122 #                                   (--NAME--) (-VALUE--)
123                                        #Bus       34
124                                        #Tr        0.01
125                                        #Tc        1.0
126                                        #Tb        10.0
127                                        #Ka        200
128                                        #Ta        0.015
129                                        #Emin      -5.0
130                                        #Emax       5.0
131  STOP
132 #(No   ) (---NOME---) (No   ) (---NOME---)
133  0008   AVR_Ger6_35  00001      AVR
134 #                                   (--NAME--) (-VALUE--)
135                                        #Bus       35
136                                        #Tr        0.01
137                                        #Tc        1.0
138                                        #Tb        10.0
139                                        #Ka        200
140                                        #Ta        0.015
141                                        #Emin      -5.0
142                                        #Emax       5.0
143  STOP
```

Figure B-2: Association of AVRs to their respective generators and insertion of the corresponding parameters.

```
145  0009   AVR_Ger7_36  00001      AVR
146  #                                   (--NAME--) (-VALUE--)
147                                        #Bus       36
148                                        #Tr        0.01
149                                        #Tc        1.0
150                                        #Tb        10.0
151                                        #Ka        200
152                                        #Ta        0.015
153                                        #Emin      -5.0
154                                        #Emax       5.0
155  STOP
156  #(No  ) (---NOME---) (No  ) (---NOME---)
157  0010   AVR_Ger8_37  00001      AVR
158  #                                   (--NAME--) (-VALUE--)
159                                        #Bus       37
160                                        #Tr        0.01
161                                        #Tc        1.0
162                                        #Tb        10.0
163                                        #Ka        200
164                                        #Ta        0.015
165                                        #Emin      -5.0
166                                        #Emax       5.0
167  STOP
168  #(No  ) (---NOME---) (No  ) (---NOME---)
169  0011   AVR_Ger9_38  00001      AVR
170  #                                   (--NAME--) (-VALUE--)
171                                        #Bus       38
172                                        #Tr        0.01
173                                        #Tc        1.0
174                                        #Tb        10.0
175                                        #Ka        200
176                                        #Ta        0.015
177                                        #Emin      -5.0
178                                        #Emax       5.0
179  STOP
180  #(No  ) (---NOME---) (No  ) (---NOME---)
181  0012   AVR_Ger10_30  00001      AVR
182  #                                   (--NAME--) (-VALUE--)
183                                        #Bus       30
184                                        #Tr        0.01
185                                        #Tc        1.0
186                                        #Tb        10.0
187                                        #Ka        200
188                                        #Ta        0.015
189                                        #Emin      -5.0
190                                        #Emax       5.0
191  STOP
192  #(No  ) (---NOME---) (No  ) (---NOME---)
193  0013   PSS_Ger1_39  00002      PSS
194  #                                   (--NAME--) (-VALUE--)
195                                       #Kpss        1
196                                       #TW          10
197                                       #T1          5
198                                       #T2          0.6
199                                       #T3          3.0
200                                       #T4          0.5
201                                      #VPSSMIN     -0.2
202                                      #VPSSMAX      0.2
203                                      #Bus          39
204  STOP
205  #(No  ) (---NOME---) (No  ) (---NOME---)
206  0014   PSS_Ger2_31  00002      PSS
207  #                                   (--NAME--) (-VALUE--)
208                                       #Kpss        0.5
209                                       #TW          10
210                                       #T1          5
211                                       #T2          0.4
212                                       #T3          1.0
213                                       #T4          0.1
214                                      #VPSSMIN     -0.2
215                                      #VPSSMAX      0.2
216                                      #Bus          31
217  STOP
218  #(No  ) (---NOME---) (No  ) (---NOME---)
219  0015   PSS_Ger3_32  00002      PSS
220  #                                   (--NAME--) (-VALUE--)
221                                       #Kpss        0.5
222                                       #TW          10
223                                       #T1          3.0
224                                       #T2          0.2
225                                       #T3          2.0
226                                       #T4          0.2
227                                      #VPSSMIN     -0.2
228                                      #VPSSMAX      0.2
229                                      #Bus          32
230  STOP
```

Figure B-3: Association of AVR and PSS models to their respective generators.

```
231  #(No   ) (---NOME---) (No   ) (---NOME---)
232   0016   PSS_Ger4_33  00002      PSS
233  #                                   (--NAME--) (-VALUE--)
234                                       #Kpss        2.0
235                                       #TW          10
236                                       #T1          1.0
237                                       #T2          0.1
238                                       #T3          1.0
239                                       #T4          0.3
240                                      #VPSSMIN     -0.2
241                                      #VPSSMAX      0.2
242                                      #Bus          33
243   STOP
244  #(No   ) (---NOME---) (No   ) (---NOME---)
245   0017   PSS_Ger5_34  00002      PSS
246  #                                   (--NAME--) (-VALUE--)
247                                       #Kpss        1.0
248                                       #TW          10
249                                       #T1          1.5
250                                       #T2          0.2
251                                       #T3          1.0
252                                       #T4          0.1
253                                      #VPSSMIN     -0.2
254                                      #VPSSMAX      0.2
255                                      #Bus          34
256   STOP
257  #(No   ) (---NOME---) (No   ) (---NOME---)
258   0018   PSS_Ger6_35  00002      PSS
259  #                                   (--NAME--) (-VALUE--)
260                                       #Kpss        4.0
261                                       #TW          10
262                                       #T1          0.5
263                                       #T2          0.1
264                                       #T3          0.5
265                                       #T4          0.05
266                                      #VPSSMIN     -0.2
267                                      #VPSSMAX      0.2
268                                      #Bus          35
269   STOP
270  #(No   ) (---NOME---) (No   ) (---NOME---)
271   0019   PSS_Ger7_36  00002      PSS
272  #                                   (--NAME--) (-VALUE--)
273                                       #Kpss        7.5
274                                       #TW          10
275                                       #T1          0.2
276                                       #T2          0.02
277                                       #T3          0.5
278                                       #T4          0.10
279                                      #VPSSMIN     -0.2
280                                      #VPSSMAX      0.2
281                                      #Bus          36
282   STOP
283  #(No   ) (---NOME---) (No   ) (---NOME---)
284   0020   PSS_Ger8_37  00002      PSS
285  #                                   (--NAME--) (-VALUE--)
286                                       #Kpss        2.0
287                                       #TW          10
288                                       #T1          1.0
289                                       #T2          0.2
290                                       #T3          1.0
291                                       #T4          0.10
292                                      #VPSSMIN     -0.2
293                                      #VPSSMAX      0.2
294                                      #Bus          37
295   STOP
296  #(No   ) (---NOME---) (No   ) (---NOME---)
297   0021   PSS_Ger9_38  00002      PSS
298  #                                   (--NAME--) (-VALUE--)
299                                       #Kpss        2.0
300                                       #TW          10
301                                       #T1          1.0
302                                       #T2          0.5
303                                       #T3          2.0
304                                       #T4          0.1
305                                      #VPSSMIN     -0.2
306                                      #VPSSMAX      0.2
307                                      #Bus          38
308   STOP
309  #(No   ) (---NOME---) (No   ) (---NOME---)
310   0022   PSS_Ger10_30  00002      PSS
311  #                                   (--NAME--) (-VALUE--)
312                                       #Kpss        1.0
313                                       #TW          10
314                                       #T1          1.0
315                                       #T2          0.05
316                                       #T3          3.0
317                                       #T4          0.50
318                                      #VPSSMIN     -0.2
319                                      #VPSSMAX      0.2
320                                      #Bus          30
321   STOP
322   -999
323  END
```

Figure B-4: Association of PSS models to their respective generators.

Appendix C

The main input file 39bus_ANATEM.STB used in the ANATEM software for nonlinear simulation of the 39-bus system is given in Figures C-1a and C-1b.

In this file, the associations with the files of steady-state operation (*.sav) from ANAREDE, pre-defined machine models (*.blt) and user-defined controllers (*.cdu) are depicted. This main file also contains the data for the applied perturbation and the association with the output file (*.plt) that contains the output variables of interest: rotor angle and frequency of all generators.

```
001  (==============================================================================
002  ( TITULO DO CASO
003  (==============================================================================
004 ⊟TITU
005 └39 GENERATOR 10 BUS SYSTEM
006  (
007  (==============================================================================
008  ( ASSOCIACAO DE ARQUIVO COM FLUXO DE POTENCIA ( ANAREDE )
009  (==============================================================================
010 ⊟ULOG
011 │2
012 └SIST_NEW_ENGLAND_VERSAOFINAL.HIS
013  (
014  (==============================================================================
015  ( RESTABELECIMENTO DO CASO DE FLUXO DE POTENCIA:
016  (==============================================================================
017 ⊟ARQV REST IMPR
018 └1
019  (
020  (==============================================================================
021  ( ASSOCIACAO DE ARQUIVO PARA SAIDA DE RELATORIOS ( opcao FILE ):
022  (==============================================================================
023 ⊟ULOG
024 │4
025 └39BUS.out
026  ((
027  ((=============================================================================
028  (( ASSOCIACAO DE ARQUIVO COM DADOS PARA PLOTAGEM:
029  ((=============================================================================
030 ⊟ULOG
031 │8
032 └39BUS.plt
033  ((
034  (==============================================================================
035  ( DADOS DE PADRAO PARA OPCOES DE EXECUCAO
036  (==============================================================================
037 ⊟DOPC IMPR CONT
038 │(Op) E (Op) E (Op) E (Op) E (Op) E (Op) E (Op) E (Op) E (Op) E
039 │IMPR   FILE   80CO   CONT
040 └999999
041  (
042  (==============================================================================
043  ( ALTERACAO DE CONSTANTES DO PROGRAMA
044  (==============================================================================
045 ⊟DCTE
046 │(Ct) (Val )
047 │TEPQ    .01  ( tolerancia de convergencia exigida p/ fluxo de potencia )
048 │TEMD  1.E-6
049 │TETE  1.E-6
050 │TABS  1.E-6  ( tolerancia absoluta )
051 └999999
052  (
053  (==============================================================================
054  ( ASSOCIACAO DE ARQUIVO COM MODELOS DE REGULADORES (ANATEM)
055  (==============================================================================
056  (
057 ⊟ulog
058 │3
059 └10GENERATOR_DADOSPUC.blt
060  ARQM
061 ⊟ULOG
062 │3
063 └10GENERATOR.cdu
064  ARQM
```

Figura C-1a : *.stb main file

```
067  (==============================================================================
068  ( ASSOCIACAO DE MAQUINAS COM MODELOS
069  (==============================================================================
070 ⊟DMAQ
071 | ( Nb)    Gr (P) (Q) Und ( Mg ) ( Mt )u( Mv )u( Me )u(Xvd)(Nbc)
072 |    39    10                0001   1001u          1100u
073 |    31    10                0002   1002u          1200u
074 |    32    10                0003   1003u          1300u
075 |    33    10                0004   1004u          1400u
076 |    34    10                0005   1005u          1500u
077 |    35    10                0006   1006u          1600u
078 |    36    10                0007   1007u          1700u
079 |    37    10                0008   1008u          1800u
080 |    38    10                0009   1009u          1900u
081 |    30    10                0010   1010u          2000u
082 └999999
083  (
084  (==============================================================================
085  ( EVENTOS
086  (==============================================================================
087  ( CURTO TRIFÁSICO-TERRA NA LINHA "C" (ENTRE BARRAS 6 E 7) , COM CURTO PRÓXIMO A
088  ( LINHA C (FOI CONSIDERADO 0% DO COMPRIMENTO)
089  ( E COM DURAÇÃO DE 4 CICLOS (OU 0.0667s)
090  (
091 ⊟DEVT IMPR
092 | (Tp)  ( Tempo)( El )( Pa)Nc( Ex)  ( % )  (ABS )  Gr Und          (Bl)P  ( Rc )  ( Xc )  ( Bc )  (Defas)
093 | APCL      0.50     16    17      16     0                                  0.1
094 | RMCL      0.60     16    17
095 | (
096 └999999
097  (
098  (==============================================================================
099  ( VARIAVEIS DE SAIDA
100  (==============================================================================
101 ⊟DPLT IMPR
102 | (Tipo)M( El )  ( Pa)  Nc Gp  ( Br)  Gr  ( Ex)  (Bl)  P
103 | DELT        30           10    39   10
104 | DELT        31           10    39   10
105 | DELT        32           10    39   10
106 | DELT        33           10    39   10
107 | DELT        34           10    39   10
108 | DELT        35           10    39   10
109 | DELT        36           10    39   10
110 | DELT        37           10    39   10
111 | DELT        38           10    39   10
112 | DELT        39           10    39   10
113 | FMAQ        31           10
114 | FMAQ        32           10
115 | FMAQ        33           10
116 | FMAQ        34           10
117 | FMAQ        35           10
118 | FMAQ        36           10
119 | FMAQ        37           10
120 | FMAQ        38           10
121 | FMAQ        39           10
122 └999999
123  (
124  (==============================================================================
125  ( DADOS DE SIMULACAO
126  (==============================================================================
127 ⊟DSIM
128 | ( Tmax )  (Stp)  ( P )  ( I )
129 └  20      .001     1      1
130  (
131  (==============================================================================
132  ( EXECUCAO DO CASO
133  (==============================================================================
134  EXSI ECHO
135  (
136  (
137  FIM
```

Figura C-1b : *.stb main file (continued)

The file 10GENERATOR.blt used in the ANATEM sotware presenting the generator models is given in Figure C-2.

```
(*************************************************************
(*                                                           *
(*          DADOS DE MODELOS DE MAQUINAS SINCRONAS           *
(*                                                           *
(*************************************************************
(
(=====================================================================
( GERADORES 1 a 10: POLOS SALIENTES
(=====================================================================
DMDG MD02
(
(-------------
(- G1 a G10 -
(-------------
(No)    (CS)  (Ld )(Lq )(L'd)      (L"d)(Ll )(T'd)      (T"d)(T"q)
(             (%)  (%)  (%)  (%)  (%)  (%)  (s)  (s)  (s)  (s)  (UNID.)
0001           2.0 1.9  0.6        .40   0.3  7.0       .05 .035
(No)    (Ra )( H )( D )(MVA)Fr C
(        (%)  (s) (pu)                                          (UNID.)
0001    0    500   0  100
(No)    (CS)  (Ld )(Lq )(L'd)      (L"d)(Ll )(T'd)      (T"d)(T"q)
(             (%)  (%)  (%)  (%)  (%)  (%)  (s)  (s)  (s)  (s)  (UNID.)
0002          29.5 28.2 6.97      5.00 3.5  6.56       .05 .035
(No)    (Ra )( H )( D )(MVA)Fr C
(        (%)  (s) (pu)
0002    0   30.3  0   100
(No)    (CS)  (Ld )(Lq )(L'd)(L'q)(L"d)(Ll )(T'd)(T'q)(T"d)(T"q)
(             (%)  (%)  (%)  (%)  (%)  (%)  (s)  (s)  (s)  (s)  (UNID.)
0003         24.9523.7  5.31      4.50 3.04  5.7       .05 .035
(No)    (Ra )( H )( D )(MVA)Fr C
(        (%)  (s) (pu)
0003    0   35.8  0    100
(No)    (CS)  (Ld )(Lq )(L'd)(L'q)(L"d)(Ll )(T'd)(T'q)(T"d)(T"q)
(             (%)  (%)  (%)  (%)  (%)  (%)  (s)  (s)  (s)  (s)  (UNID.)
0004          26.2 25.8 4.36     3.50 2.95 5.69      .05  .035
(No)    (Ra )( H )( D )(MVA)Fr C
(        (%)  (s) (pu)
0004     0  28.6  0   100
(No)    (CS)  (Ld )(Lq )(L'd)(L'q)(L"d)(Ll )(T'd)(T'q)(T"d)(T"q)
(             (%)  (%)  (%)  (%)  (%)  (%)  (s)  (s)  (s)  (s)  (UNID.)
0005          67   62   13.2     8.90  5.4  5.4      .05  .035
(No)    (Ra )( H )( D )(MVA)Fr C
(        (%)  (s) (pu)
0005     0   26   0   100
(No)    (CS)  (Ld )(Lq )(L'd)(L'q)(L"d)(Ll )(T'd)(T'q)(T"d)(T"q)
(             (%)  (%)  (%)  (%)  (%)  (%)  (s)  (s)  (s)  (s)  (UNID.)
0006          25.4 24.1 5.0      4.00 2.24  7.3       .050 .035
(No)    (Ra )( H )( D )(MVA)Fr C
(        (%)  (s) (pu)
0006     0  34.8   0   100
(No)    (CS)  (Ld )(Lq )(L'd)(L'q)(L"d)(Ll )(T'd)(T'q)(T"d)(T"q)
(             (%)  (%)  (%)  (%)  (%)  (%)  (s)  (s)  (s)  (s)  (UNID.)
0007          29.5 29.2 4.9      4.40 3.22 5.66      .050 .035
(No)    (Ra )( H )( D )(MVA)Fr C
(        (%)  (s) (pu)
0007     0  26.4   0   100
(No)    (CS)  (Ld )(Lq )(L'd)(L'q)(L"d)(Ll )(T'd)(T'q)(T"d)(T"q)
(             (%)  (%)  (%)  (%)  (%)  (%)  (s)  (s)  (s)  (s)  (UNID.)
0008          29   28   5.7      4.50 2.80  6.7       .050.035
(No)    (Ra )( H )( D )(MVA)Fr C
(        (%)  (s) (pu)
0008     0  24.3   0   100
(No)    (CS)  (Ld )(Lq )(L'd)(L'q)(L"d)(Ll )(T'd)(T'q)(T"d)(T"q)
(             (%)  (%)  (%)  (%)  (%)  (%)  (s)  (s)  (s)  (s)  (UNID.)
0009         21.06 20.5 5.7      4.50 2.98  4.79     .050 .035
(No)    (Ra )( H )( D )(MVA)Fr C
(        (%)  (s) (pu)
0009     0   34.5  0   100
(No)    (CS)  (Ld )(Lq )(L'd)(L'q)(L"d)(Ll )(T'd)(T'q)(T"d)(T"q)
(             (%)  (%)  (%)  (%)  (%)  (%)  (s)  (s)  (s)  (s)  (UNID.)
0010          10   6.9  3.1      2.50 1.25  10.2      .050 .035
(No)    (Ra )( H )( D )(MVA)Fr C
(        (%)  (s) (pu)
0010     0   42.0  0   100
999999
FIM
```

Figure C- 2: File with generator models and parameters

The file 10GENERATOR.cdu used in the ANATEM software presents the models of the controllers and is given in Figures C-3 to C-7.

```
001  ( ************************************************************************
002  ( *                                                                      *
003  ( *  ARQUIVO ........ 10GENERATOR.cdu                                    *
004  ( *                                                                      *
005  ( *  FORMATO ........ ANATEM                                             *
006  ( *                                                                      *
007  ( ************************************************************************
008  (=========================================================================
009  (=========================================================================
010  ( REGULADORES DE TENSAO
011  (=========================================================================
012  (
013  (- AVR DO GERADOR 1 A 10 : AVR TYPE SMP_LIM
014  DCDU
015  (ncdu) ( nome cdu )
016    1001 AVR_G1
017  (EFPAR (nome) (     valor      )
018  DEFPAR #TR                  0.01
019  DEFPAR #TC                   1.0
020  DEFPAR #TB                  10.0
021  DEFPAR #KA                 200.0
022  DEFPAR #TA                 0.015
023  (
024  (nb)i(tipo) (stip)s(vent) (vsai) ( p1 )( p2 )( p3 )( p4 ) (vmin) (vmax)
025  0001 ENTRAD               Vref
026  0002 IMPORT   VTR         Vt
027  0003 IMPORT   VSAD        Vpss
028  0010 LEDLAG        Vt     X1     1.0   0.0   1.0   #TR
029  0020 SOMA        - X1     X2
030                     Vref   X2
031                     Vpss   X2
032  0030 LEDLAG         X2    X3     1.0   #TC   1.0   #TB
033  0040 LEDLAG         X3    X4     #KA   0.0   1.0   #TA
034  0050 LIMITA         X4    Efd                            VEmin   VEmax
035  0100 EXPORT   EFD    Efd
036  (
037  (DEFVA (stip) (vdef) ( d1 )
038  DEFVAL        VEmin    -5.0
039  DEFVAL        VEmax     5.0
040  FIMCDU
041  (ncdu) ( nome cdu )
042    1002 AVR_G2
043  (EFPAR (nome) (     valor      )
044  DEFPAR #TR                  0.01
045  DEFPAR #TC                   1.0
046  DEFPAR #TB                  10.0
047  DEFPAR #KA                 200.0
048  DEFPAR #TA                 0.015
049  (
050  (nb)i(tipo) (stip)s(vent) (vsai) ( p1 )( p2 )( p3 )( p4 ) (vmin) (vmax)
051  0001 ENTRAD               Vref
052  0002 IMPORT   VTR         Vt
053  0003 IMPORT   VSAD        Vpss
054  0010 LEDLAG        Vt     X1     1.0   0.0   1.0   #TR
055  0020 SOMA        - X1     X2
056                     Vref   X2
057                     Vpss   X2
058  0030 LEDLAG         X2    X3     1.0   #TC   1.0   #TB
059  0040 LEDLAG         X3    X4     #KA   0.0   1.0   #TA
060  0050 LIMITA         X4    Efd                            VEmin   VEmax
061  0100 EXPORT   EFD    Efd
062  (
063  (DEFVA (stip) (vdef) ( d1 )
064  DEFVAL        VEmin    -5.0
065  DEFVAL        VEmax     5.0
066  FIMCDU
```

Figure C-3: Voltage regulators of generators 1 and 2.

```
(ncdu) ( nome cdu )
  1003 AVR_G3
(EFPAR (nome) (     valor      )
DEFPAR #TR                  0.01
DEFPAR #TC                   1.0
DEFPAR #TB                  10.0
DEFPAR #KA                 200.0
DEFPAR #TA                 0.015
(
(nb)i(tipo) (stip)s(vent) (vsai) ( p1 )( p2 )( p3 )( p4 ) (vmin) (vmax)
0001 ENTRAD                Vref
0002 IMPORT   VTR          Vt
0003 IMPORT   VSAD         Vpss
0010 LEDLAG        Vt      X1     1.0   0.0   1.0   #TR
0020 SOMA        - X1      X2
                   Vref    X2
                   Vpss    X2
0030 LEDLAG         X2     X3     1.0   #TC   1.0   #TB
0040 LEDLAG         X3     X4     #KA   0.0   1.0   #TA
0050 LIMITA         X4     Efd                              VEmin   VEmax
0100 EXPORT   EFD    Efd
(
(DEFVA (stip) (vdef) ( d1 )
DEFVAL        VEmin    -5.0
DEFVAL        VEmax     5.0
FIMCDU
(ncdu) ( nome cdu )
  1004 AVR_G4
(EFPAR (nome) (     valor      )
DEFPAR #TR                  0.01
DEFPAR #TC                   1.0
DEFPAR #TB                  10.0
DEFPAR #KA                 200.0
DEFPAR #TA                 0.015
(
(nb)i(tipo) (stip)s(vent) (vsai) ( p1 )( p2 )( p3 )( p4 ) (vmin) (vmax)
0001 ENTRAD                Vref
0002 IMPORT   VTR          Vt
0003 IMPORT   VSAD         Vpss
0010 LEDLAG        Vt      X1     1.0   0.0   1.0   #TR
0020 SOMA        - X1      X2
                   Vref    X2
                   Vpss    X2
0030 LEDLAG         X2     X3     1.0   #TC   1.0   #TB
0040 LEDLAG         X3     X4     #KA   0.0   1.0   #TA
0050 LIMITA         X4     Efd                              VEmin   VEmax
0100 EXPORT   EFD    Efd
(
(DEFVA (stip) (vdef) ( d1 )
DEFVAL        VEmin    -5.0
DEFVAL        VEmax     5.0
FIMCDU
(ncdu) ( nome cdu )
  1005 AVR_G5
(EFPAR (nome) (     valor      )
DEFPAR #TR                  0.01
DEFPAR #TC                   1.0
DEFPAR #TB                  10.0
DEFPAR #KA                 200.0
DEFPAR #TA                 0.015
(
(nb)i(tipo) (stip)s(vent) (vsai) ( p1 )( p2 )( p3 )( p4 ) (vmin) (vmax)
0001 ENTRAD                Vref
0002 IMPORT   VTR          Vt
0003 IMPORT   VSAD         Vpss
0010 LEDLAG        Vt      X1     1.0   0.0   1.0   #TR
0020 SOMA        - X1      X2
                   Vref    X2
                   Vpss    X2
0030 LEDLAG         X2     X3     1.0   #TC   1.0   #TB
0040 LEDLAG         X3     X4     #KA   0.0   1.0   #TA
0050 LIMITA         X4     Efd                              VEmin   VEmax
0100 EXPORT   EFD    Efd
(
(DEFVA (stip) (vdef) ( d1 )
DEFVAL        VEmin    -5.0
DEFVAL        VEmax     5.0
FIMCDU
```

Figure C-4: Voltage regulators of generators 3 to 5.

```
146   1006 AVR_G6
147 (EFPAR (nome) (     valor      )
148 DEFPAR #TR                  0.01
149 DEFPAR #TC                   1.0
150 DEFPAR #TB                  10.0
151 DEFPAR #KA                 200.0
152 DEFPAR #TA                 0.015
153 (
154 (nb)i(tipo) (stip)s(vent) (vsai) ( p1 )( p2 )( p3 )( p4 ) (vmin) (vmax)
155 0001 ENTRAD               Vref
156 0002 IMPORT   VTR         Vt
157 0003 IMPORT   VSAD        Vpss
158 0010 LEDLAG        Vt     X1     1.0   0.0   1.0   #TR
159 0020 SOMA         - X1    X2
160                    Vref   X2
161                    Vpss   X2
162 0030 LEDLAG         X2    X3     1.0   #TC   1.0   #TB
163 0040 LEDLAG         X3    X4     #KA   0.0   1.0   #TA
164 0050 LIMITA         X4    Efd                            VEmin   VEmax
165 0100 EXPORT   EFD    Efd
166 (
167 (DEFVA (stip) (vdef) ( d1 )
168 DEFVAL        VEmin    -5.0
169 DEFVAL        VEmax     5.0
170 FIMCDU
171 (ncdu) ( nome cdu )
172   1007 AVR_G7
173 (EFPAR (nome) (     valor      )
174 DEFPAR #TR                  0.01
175 DEFPAR #TC                   1.0
176 DEFPAR #TB                  10.0
177 DEFPAR #KA                 200.0
178 DEFPAR #TA                 0.015
179 (
180 (nb)i(tipo) (stip)s(vent) (vsai) ( p1 )( p2 )( p3 )( p4 ) (vmin) (vmax)
181 0001 ENTRAD               Vref
182 0002 IMPORT   VTR         Vt
183 0003 IMPORT   VSAD        Vpss
184 0010 LEDLAG        Vt     X1     1.0   0.0   1.0   #TR
185 0020 SOMA         - X1    X2
186                    Vref   X2
187                    Vpss   X2
188 0030 LEDLAG         X2    X3     1.0   #TC   1.0   #TB
189 0040 LEDLAG         X3    X4     #KA   0.0   1.0   #TA
190 0050 LIMITA         X4    Efd                            VEmin   VEmax
191 0100 EXPORT   EFD    Efd
192 (
193 (DEFVA (stip) (vdef) ( d1 )
194 DEFVAL        VEmin    -5.0
195 DEFVAL        VEmax     5.0
196 FIMCDU
197 (ncdu) ( nome cdu )
198   1008 AVR_G8
199 (EFPAR (nome) (     valor      )
200 DEFPAR #TR                  0.01
201 DEFPAR #TC                   1.0
202 DEFPAR #TB                  10.0
203 DEFPAR #KA                 200.0
204 DEFPAR #TA                 0.015
205 (
206 (nb)i(tipo) (stip)s(vent) (vsai) ( p1 )( p2 )( p3 )( p4 ) (vmin) (vmax)
207 0001 ENTRAD               Vref
208 0002 IMPORT   VTR         Vt
209 0003 IMPORT   VSAD        Vpss
210 0010 LEDLAG        Vt     X1     1.0   0.0   1.0   #TR
211 0020 SOMA         - X1    X2
212                    Vref   X2
213                    Vpss   X2
214 0030 LEDLAG         X2    X3     1.0   #TC   1.0   #TB
215 0040 LEDLAG         X3    X4     #KA   0.0   1.0   #TA
216 0050 LIMITA         X4    Efd                            VEmin   VEmax
217 0100 EXPORT   EFD    Efd
218 (
219 (DEFVA (stip) (vdef) ( d1 )
220 DEFVAL        VEmin    -5.0
221 DEFVAL        VEmax     5.0
222 FIMCDU
```

Figure C-5: Voltage regulators of generators 6 to 8

```
(ncdu) ( nome cdu )
  1009 AVR_G9
(EFPAR (nome) (     valor      )
DEFPAR #TR                  0.01
DEFPAR #TC                   1.0
DEFPAR #TB                  10.0
DEFPAR #KA                 200.0
DEFPAR #TA                 0.015
(
(nb)i(tipo) (stip)s(vent) (vsai) ( p1 )( p2 )( p3 )( p4 ) (vmin) (vmax)
0001 ENTRAD               Vref
0002 IMPORT   VTR         Vt
0003 IMPORT   VSAD        Vpss
0010 LEDLAG        Vt     X1     1.0   0.0   1.0   #TR
0020 SOMA        - X1     X2
                  Vref    X2
                  Vpss    X2
0030 LEDLAG         X2    X3     1.0   #TC   1.0   #TB
0040 LEDLAG         X3    X4     #KA   0.0   1.0   #TA
0050 LIMITA         X4    Efd                            VEmin   VEmax
0100 EXPORT   EFD    Efd
(
(DEFVA (stip) (vdef) ( d1 )
DEFVAL        VEmin    -5.0
DEFVAL        VEmax     5.0
FIMCDU
(ncdu) ( nome cdu )
  1010 AVR_G10
(EFPAR (nome) (     valor      )
DEFPAR #TR                  0.01
DEFPAR #TC                   1.0
DEFPAR #TB                  10.0
DEFPAR #KA                 200.0
DEFPAR #TA                 0.015
(
(nb)i(tipo) (stip)s(vent) (vsai) ( p1 )( p2 )( p3 )( p4 ) (vmin) (vmax)
0001 ENTRAD               Vref
0002 IMPORT   VTR         Vt
0003 IMPORT   VSAD        Vpss
0010 LEDLAG        Vt     X1     1.0   0.0   1.0   #TR
0020 SOMA        - X1     X2
                  Vref    X2
                  Vpss    X2
0030 LEDLAG         X2    X3     1.0   #TC   1.0   #TB
0040 LEDLAG         X3    X4     #KA   0.0   1.0   #TA
0050 LIMITA         X4    Efd                            VEmin   VEmax
0100 EXPORT   EFD    Efd
(
(DEFVA (stip) (vdef) ( d1 )
DEFVAL        VEmin    -5.0
DEFVAL        VEmax     5.0
FIMCDU
(=====================================================================
( MODELOS DE ESTABILIZADORES PSS
(=====================================================================
(- PSS DO GERADOR 1 : PSS TYPE CONV
(ncdu) ( nome cdu )
  1100 PSS_G1
(EFPAR (nome) (     valor      )
DEFPAR #K                    1.0
DEFPAR #TW                  10.0
DEFPAR #T1                   5.0
DEFPAR #T2                  0.60
DEFPAR #T3                   3.0
DEFPAR #T4                  0.50
(nb)i(tipo) (stip)s(vent) (vsai) ( p1 )( p2 )( p3 )( p4 ) (vmin) (vmax)
0001 IMPORT  DWMAQ         Dw
0020  GANHO          Dw    X1    #K
0030 WSHOUT          X1    X2    #TW   1.0    #TW
0040 LEDLAG          X2    X3    1.0   #T1    1.0   #T2
0050 LEDLAG          X3    X4    1.0   #T3    1.0   #T4
0060 LIMITA          X4   Vsad                           Vpmin   Vpmax
0100 EXPORT  VSAD   Vsad
(DEFVA (stip) (vdef) ( d1 )
DEFVAL        Vpmin    -0.2
DEFVAL        Vpmax     0.2
FIMCDU
```

Figure C-6 : Voltage regulators of generators 9 and 10 and PSS associated to generator 1.

```
(-----------------------------------------------------------------------
(- PSS DO GERADOR 2 : PSS TYPE CONV
(ncdu) ( nome cdu )
  1200 PSS_G2
(EFPAR (nome) (     valor      )
DEFPAR #K                    0.5
DEFPAR #TW                  10.0
DEFPAR #T1                   5.0
DEFPAR #T2                  0.40
DEFPAR #T3                   1.0
DEFPAR #T4                  0.10
(
(nb)i(tipo) (stip)s(vent) (vsai) ( p1 )( p2 )( p3 )( p4 ) (vmin) (vmax)
0001 IMPORT  DWMAQ         Dw
0020  GANHO           Dw    X1    #K
0030 WSHOUT           X1    X2    #TW   1.0    #TW
0040 LEDLAG           X2    X3    1.0   #T1    1.0   #T2
0050 LEDLAG           X3    X4    1.0   #T3    1.0   #T4
0060 LIMITA           X4   Vsad                          Vpmin  Vpmax
0100 EXPORT  VSAD   Vsad
(
(DEFVA (stip) (vdef) ( d1 )
DEFVAL        Vpmin    -0.2
DEFVAL        Vpmax     0.2
FIMCDU
(
(-----------------------------------------------------------------------
(- PSS DO GERADOR 3 : PSS TYPE CONV
(ncdu) ( nome cdu )
  1300 PSS_G3
(EFPAR (nome) (     valor      )
DEFPAR #K                    0.5
DEFPAR #TW                  10.0
DEFPAR #T1                   3.0
DEFPAR #T2                  0.20
DEFPAR #T3                   2.0
DEFPAR #T4                  0.20
(
(nb)i(tipo) (stip)s(vent) (vsai) ( p1 )( p2 )( p3 )( p4 ) (vmin) (vmax)
0001 IMPORT  DWMAQ         Dw
0020  GANHO           Dw    X1    #K
0030 WSHOUT           X1    X2    #TW   1.0    #TW
0040 LEDLAG           X2    X3    1.0   #T1    1.0   #T2
0050 LEDLAG           X3    X4    1.0   #T3    1.0   #T4
0060 LIMITA           X4   Vsad                          Vpmin  Vpmax
0100 EXPORT  VSAD   Vsad
(DEFVA (stip) (vdef) ( d1 )
DEFVAL        Vpmin    -0.2
DEFVAL        Vpmax     0.2
FIMCDU
(
(-----------------------------------------------------------------------
(- PSS DO GERADOR 4 : PSS TYPE CONV
(ncdu) ( nome cdu )
  1400 PSS_G4
(EFPAR (nome) (     valor      )
DEFPAR #K                    2.0
DEFPAR #TW                  10.0
DEFPAR #T1                   1.0
DEFPAR #T2                  0.10
DEFPAR #T3                   1.0
DEFPAR #T4                  0.30
(
(nb)i(tipo) (stip)s(vent) (vsai) ( p1 )( p2 )( p3 )( p4 ) (vmin) (vmax)
0001 IMPORT  DWMAQ         Dw
0020  GANHO           Dw    X1    #K
0030 WSHOUT           X1    X2    #TW   1.0    #TW
0040 LEDLAG           X2    X3    1.0   #T1    1.0   #T2
0050 LEDLAG           X3    X4    1.0   #T3    1.0   #T4
0060 LIMITA           X4   Vsad                          Vpmin  Vpmax
0100 EXPORT  VSAD   Vsad
(
(DEFVA (stip) (vdef) ( d1 )
DEFVAL        Vpmin    -0.2
DEFVAL        Vpmax     0.2
FIMCDU
```

Figure C-7: PSSs of generators 2 to 4.

```
FIMCDU
(-----------------------------------------------------------------------
(- PSS DO GERADOR 5 : PSS TYPE CONV
(ncdu) ( nome cdu )
  1500 PSS_G5
(EFPAR (nome) (     valor      )
DEFPAR #K                    1.0
DEFPAR #TW                  10.0
DEFPAR #T1                   1.5
DEFPAR #T2                  0.20
DEFPAR #T3                   1.0
DEFPAR #T4                  0.10
(
(nb)i(tipo) (stip)s(vent) (vsai) ( p1 )( p2 )( p3 )( p4 ) (vmin) (vmax)
0001 IMPORT  DWMAQ         Dw
0020  GANHO           Dw    X1    #K
0030 WSHOUT           X1    X2    #TW   1.0    #TW
0040 LEDLAG           X2    X3    1.0   #T1    1.0   #T2
0050 LEDLAG           X3    X4    1.0   #T3    1.0   #T4
0060 LIMITA           X4   Vsad                          Vpmin  Vpmax
0100 EXPORT  VSAD   Vsad
(
(DEFVA (stip) (vdef) ( d1 )
DEFVAL        Vpmin    -0.2
DEFVAL        Vpmax     0.2
FIMCDU
(-----------------------------------------------------------------------
(- PSS DO GERADOR 6 : PSS TYPE CONV
(ncdu) ( nome cdu )
  1600 PSS_G6
(EFPAR (nome) (     valor      )
DEFPAR #K                    4.0
DEFPAR #TW                  10.0
DEFPAR #T1                   0.5
DEFPAR #T2                  0.10
DEFPAR #T3                   0.5
DEFPAR #T4                  0.05
(
(nb)i(tipo) (stip)s(vent) (vsai) ( p1 )( p2 )( p3 )( p4 ) (vmin) (vmax)
0001 IMPORT  DWMAQ         Dw
0020  GANHO           Dw    X1    #K
0030 WSHOUT           X1    X2    #TW   1.0    #TW
0040 LEDLAG           X2    X3    1.0   #T1    1.0   #T2
0050 LEDLAG           X3    X4    1.0   #T3    1.0   #T4
0060 LIMITA           X4   Vsad                          Vpmin  Vpmax
0100 EXPORT  VSAD   Vsad
(
(DEFVA (stip) (vdef) ( d1 )
DEFVAL        Vpmin    -0.2
DEFVAL        Vpmax     0.2
FIMCDU
(-----------------------------------------------------------------------
(- PSS DO GERADOR 7 : PSS TYPE CONV
(ncdu) ( nome cdu )
  1700 PSS_G7
(EFPAR (nome) (     valor      )
DEFPAR #K                    7.5
DEFPAR #TW                  10.0
DEFPAR #T1                   0.2
DEFPAR #T2                  0.02
DEFPAR #T3                   0.5
DEFPAR #T4                  0.10
(nb)i(tipo) (stip)s(vent) (vsai) ( p1 )( p2 )( p3 )( p4 ) (vmin) (vmax)
0001 IMPORT  DWMAQ         Dw
0020  GANHO           Dw    X1    #K
0030 WSHOUT           X1    X2    #TW   1.0    #TW
0040 LEDLAG           X2    X3    1.0   #T1    1.0   #T2
0050 LEDLAG           X3    X4    1.0   #T3    1.0   #T4
0060 LIMITA           X4   Vsad                          Vpmin  Vpmax
0100 EXPORT  VSAD   Vsad
(DEFVA (stip) (vdef) ( d1 )
DEFVAL        Vpmin    -0.2
DEFVAL        Vpmax     0.2
FIMCDU
(-----------------------------------------------------------------------
```

Figure C-8: PSSs of generators 5 to 7.

```
(- PSS DO GERADOR 8 : PSS TYPE CONV
(ncdu) ( nome cdu )
  1800 PSS_G8
(EFPAR (nome) (     valor      )
DEFPAR #K                    2.0
DEFPAR #TW                  10.0
DEFPAR #T1                   1.0
DEFPAR #T2                  0.20
DEFPAR #T3                   1.0
DEFPAR #T4                  0.10
(
(nb)i(tipo) (stip)s(vent) (vsai) ( p1 )( p2 )( p3 )( p4 ) (vmin) (vmax)
0001 IMPORT  DWMAQ          Dw
0020  GANHO            Dw    X1    #K
0030 WSHOUT            X1    X2    #TW   1.0    #TW
0040 LEDLAG            X2    X3    1.0   #T1    1.0   #T2
0050 LEDLAG            X3    X4    1.0   #T3    1.0   #T4
0060 LIMITA            X4   Vsad                          Vpmin  Vpmax
0100 EXPORT  VSAD   Vsad
(
(DEFVA (stip) (vdef) ( d1 )
DEFVAL        Vpmin    -0.2
DEFVAL        Vpmax     0.2
FIMCDU
(
(-----------------------------------------------------------------------
(- PSS DO GERADOR 9 : PSS TYPE CONV
(ncdu) ( nome cdu )
  1900 PSS_G9
(EFPAR (nome) (     valor      )
DEFPAR #K                    2.0
DEFPAR #TW                  10.0
DEFPAR #T1                   1.0
DEFPAR #T2                  0.50
DEFPAR #T3                   2.0
DEFPAR #T4                  0.10
(
(nb)i(tipo) (stip)s(vent) (vsai) ( p1 )( p2 )( p3 )( p4 ) (vmin) (vmax)
0001 IMPORT  DWMAQ          Dw
0020  GANHO            Dw    X1    #K
0030 WSHOUT            X1    X2    #TW   1.0    #TW
0040 LEDLAG            X2    X3    1.0   #T1    1.0   #T2
0050 LEDLAG            X3    X4    1.0   #T3    1.0   #T4
0060 LIMITA            X4   Vsad                          Vpmin  Vpmax
0100 EXPORT  VSAD   Vsad
(
(DEFVA (stip) (vdef) ( d1 )
DEFVAL        Vpmin    -0.2
DEFVAL        Vpmax     0.2
FIMCDU
(
(-----------------------------------------------------------------------
(- PSS DO GERADOR 10 : PSS TYPE CONV
(ncdu) ( nome cdu )
  2000 PSS_G10
(EFPAR (nome) (     valor      )
DEFPAR #K                    1.0
DEFPAR #TW                  10.0
DEFPAR #T1                   1.0
DEFPAR #T2                  0.05
DEFPAR #T3                   3.0
DEFPAR #T4                  0.50
(
(nb)i(tipo) (stip)s(vent) (vsai) ( p1 )( p2 )( p3 )( p4 ) (vmin) (vmax)
0001 IMPORT  DWMAQ          Dw
0020  GANHO            Dw    X1    #K
0030 WSHOUT            X1    X2    #TW   1.0    #TW
0040 LEDLAG            X2    X3    1.0   #T1    1.0   #T2
0050 LEDLAG            X3    X4    1.0   #T3    1.0   #T4
0060 LIMITA            X4   Vsad                          Vpmin  Vpmax
0100 EXPORT  VSAD   Vsad
(
(DEFVA (stip) (vdef) ( d1 )
DEFVAL        Vpmin    -0.2
DEFVAL        Vpmax     0.2
FIMCDU
999999
```

Figure C-9: PSSs of generators 8 to 10.

References

[1] Rogers, G. “Power system oscillations”. Norwell, MA: Kluwer, 2000.